3CON Anlagenbau GmbH

Kleinfeld 16
A-6341 Ebbs
+43 (0) 5373 42111 - 0

Company / customer	3CON
Description	DAG_BR
Collector number	1011002189

Project name	1011005803_CEFA
Responsible for project	Luca Mack
Last EPLAN version used	2024.0.3
Manufacturing date	2024
Place of installation	Zaragoza / ESP

Created on 02.09.2024

Edit date 16.01.2025 by (short name) C.DEMIR

Number of pages 122

&BAB/1

Table of contents

3CON Anlagenbau GmbH
Kleinfeld 16
A-6341 Ebbs

[3CON]_F06_001_V01

Function designation	Page	Page description	Notes	Date	Processor
&BAA	1	Title / cover page		02.09.2024	AK
&BAB	1	Table of contents		16.01.2025	AK
&BAB	2	Table of contents		13.01.2025	AK
&BAB	3	Table of contents		13.01.2025	AK
&BAB	4	Table of contents		16.01.2025	AK
&BAB	5	Table of contents		16.01.2025	AK
&BAB	6	Table of contents		16.01.2025	AK
&BAB	7	Table of contents		03.09.2024	AK
&EEB	1	IEC 61439-2		02.09.2024	AK
&EEC	1	Implementation regulations		16.01.2025	
&EDB	1	Overview projects		02.09.2024	AK
&EDB	2	Structure identifier overview		02.09.2024	AK
&EDB	3	Structure identifier overview		03.09.2024	AK
&EDB	4	Structure identifier overview		03.09.2024	AK
&EDB	5	Structure identifier overview		03.09.2024	AK
&EFA	1	Bus overview LT01		02.09.2024	AK
&EFA	2	Bus overview UT01		02.09.2024	AK
Function designation	**Page**	**Page description**	**Notes**	**Date**	**Processor**
=GE		**POT equalization**			
&EFS +LT01 =GE	1	Potential eqalization		02.09.2024	AK
&EFS +UT01 =GE	1	Potential eqalization		02.09.2024	AK
Function designation	**Page**	**Page description**	**Notes**	**Date**	**Processor**
=GD24		**Power DC (24Vdc)**			
&EFS +LT01.X01 =GD24	1	Potential distribution	81	03.09.2024	AK

Table of contents

3CON Anlagenbau GmbH
Kleinfeld 16
A-6341 Ebbs

[3CON]_F06_001_V01

Function designation	Page	Page description	Notes	Date	Processor
=GD24		**Power DC (24Vdc)**			
&EFS +UT01.X01 =GD24	1	Potential distribution	81	03.09.2024	AK
Function designation	**Page**	**Page description**	**Notes**	**Date**	**Processor**
=GN		**N-distribution**			
&EFS +UT01 =GN	1	neutral conductor distribution		02.09.2024	AK
Function designation	**Page**	**Page description**	**Notes**	**Date**	**Processor**
=PLC		**PLC control**			
&EFA2 +LT01.X01 =PLC	1	PLC-Diagram		13.01.2025	AK
&EFA2 +LT01.X01 =PLC	2	PLC-Diagram		22.10.2024	AK
&EFA2 +LT01.X01 =PLC	3	PLC-Diagram		22.10.2024	AK
&EFA3 +LT01.X01 =PLC	1	PLC card overview		03.09.2024	AK
&EFS +LT01.X01 =PLC	1	PLC-ET200SP		03.09.2024	AK
&EFS +LT01.X01 =PLC	2	PLC-ET200SP		03.09.2024	AK
&EFS +LT01.X01 =PLC	3	Information storage		03.09.2024	AK
&EFA2 +UT01.X01 =PLC	1	PLC-Diagram		29.11.2024	AK
&EFA2 +UT01.X01 =PLC	2	PLC-Diagram		30.10.2024	AK
&EFA3 +UT01.X01 =PLC	1	PLC card overview		03.09.2024	AK
&EFS +UT01.X01 =PLC	1	PLC-ET200SP		03.09.2024	AK
&EFS +UT01.X01 =PLC	2	PLC-ET200SP		03.09.2024	AK
Function designation	**Page**	**Page description**	**Notes**	**Date**	**Processor**
=XS		**Connecting systems (docking station)**			
&EFS +LT01 =XS	1	Plug		03.09.2024	AK
&EFS +UT01 =XS	1	Plug		03.09.2024	AK

Table of contents

3CON Anlagenbau GmbH
Kleinfeld 16
A-6341 Ebbs

[3CON]_F06_001_V01

Function designation	Page	Page description	Notes	Date	Processor
=EA		**process water**			
&EFS +LT01 =EA	1	Temperature queries temperature control circuits		03.09.2024	AK
&EFS +UT01 =EA	1	Temperature queries temperature control circuits		29.11.2024	AK
Function designation	**Page**	**Page description**	**Notes**	**Date**	**Processor**
=EC		**Heating system AH**			
&EFS1 +UT01 =EC	1	Heating		30.10.2024	AK
&EFS1 +UT01 =EC	2	Heating		30.10.2024	AK
&EFS1 +UT01 =EC	3	Heating		30.10.2024	AK
&EFS1 +UT01 =EC	4	Heating		30.10.2024	AK
Function designation	**Page**	**Page description**	**Notes**	**Date**	**Processor**
=KH		**Fluidic signal object**			
&EFS1 +LT01 =KH	1	Valve terminal SMC 1		22.10.2024	AK
&EFS1 +LT01 =KH	2	Valve terminal SMC 2		17.09.2024	AK
Function designation	**Page**	**Page description**	**Notes**	**Date**	**Processor**
=BA05		**Component-recognition**			
&EFS +LT01 =BA05	1	Queries		30.10.2024	AK
&EFS +UT01 =BA05	1	Queries		17.09.2024	AK
Function designation	**Page**	**Page description**	**Notes**	**Date**	**Processor**
=MC01		**Slider**			
&EFS +LT01 =MC01	1	Queries		16.10.2024	AK
&EFS +LT01 =MC01	2	Queries		13.01.2025	AK
&EFS +UT01 =MC01	1	Queries		03.09.2024	AK
&EFS +UT01 =MC01	2	Queries		17.09.2024	AK
&EFS +UT01 =MC01	3	Valves		17.09.2024	AK

Table of contents

3CON Anlagenbau GmbH
Kleinfeld 16
A-6341 Ebbs

[3CON]_F06_001_V01

Function designation	Page	Page description	Notes	Date	Processor
=MC02		**Edge-folding**			
&EFS +LT01 =MC02	1	Queries		17.09.2024	AK
&EFS +LT01 =MC02	2	Queries		17.09.2024	AK
&EFS +LT01 =MC02	3	Queries		17.09.2024	AK
&EFS +LT01 =MC02	4	Queries		17.09.2024	AK
Function designation	**Page**	**Page description**	**Notes**	**Date**	**Processor**
=ML06		**Gripper/Needles**			
&EFS +UT01 =ML06	1	Queries		06.11.2024	KP
&EFS +UT01 =ML06	2	Valves		03.09.2024	AK
Function designation	**Page**	**Page description**	**Notes**	**Date**	**Processor**
=SA		**Push buttons**			
&EFS +LT01 =SA	1	Gripper UT		17.09.2024	AK
Function designation	**Page**	**Page description**	**Notes**	**Date**	**Processor**
=REPORT		**Project-related evaluations**			
&EMA3 +LT01 =REPORT	1	connector overview		03.09.2024	AK
&EMA4 +LT01 =REPORT	1	Connector layout plan : HAR.09 14 024 0371		16.01.2025	
&EPA +LT01 =REPORT	1	Equipment list		13.01.2025	AK
&EPA +LT01 =REPORT	2	Equipment list		13.01.2025	AK
&EPC1 +LT01 =REPORT	1	Article Sum BOM		16.01.2025	
&EPC1 +LT01 =REPORT	2	Article Sum BOM		16.01.2025	
&EPC1 +LT01 =REPORT	3	Article Sum BOM		16.01.2025	
&ELU +LT01.X01 =REPORT	1	S1:Montageplatte		02.09.2024	AK
&ELU +LT01.X01 =REPORT	2	LT01.X01		02.09.2024	AK
&ELU +LT01.X01 =REPORT	3	S1:Montageplatte		02.09.2024	AK
&ELU +LT01.X01 =REPORT	4	S1:Montageplatte		16.01.2025	

Table of contents

3CON Anlagenbau GmbH
Kleinfeld 16
A-6341 Ebbs

[3CON]_F06_001_V01

Function designation	Page	Page description	Notes	Date	Processor
=REPORT		**Project-related evaluations**			
&ELU +LT01.X01 =REPORT	5	LT01.X01		16.01.2025	
&ELU +LT01.X01 =REPORT	6	S1:Montageplatte		16.01.2025	
&ELU +LT01.X01 =REPORT	7	LT01.X01		16.01.2025	
&EMA1 +LT01.X01 =REPORT	1	Terminal-strip overview		02.09.2024	AK
&EMA2 +LT01.X01 =REPORT	1	Klemmenplan ==1005803+LT01.X01-XD.21		03.09.2024	AK
&EMA2 +LT01.X01 =REPORT	2	Klemmenplan ==1005803+LT01.X01-XD.22		03.09.2024	AK
&EMA2 +LT01.X01 =REPORT	3	Klemmenplan ==1005803+LT01.X01-XD.24		03.09.2024	AK
&EMA2 +LT01.X01 =REPORT	4	Klemmenplan ==1005803+LT01.X01-XD.25		03.09.2024	AK
&EMA2 +LT01.X01 =REPORT	5	Klemmenplan ==1005803+LT01.X01-XEA.1		03.09.2024	AK
&EPA +LT01.X01 =REPORT	1	Equipment list		03.09.2024	AK
&EPC1 +LT01.X01 =REPORT	1	Article Sum BOM		16.01.2025	
&EPC1 +LT01.X01 =REPORT	2	Article Sum BOM		16.01.2025	
&EPC1 +LT01.X01 =REPORT	3	Article Sum BOM		16.01.2025	
&ELU +LT01.HS01=REPORT	1	S2:Montageplatte		02.09.2024	AK
&ELU +LT01.HS01=REPORT	2	LT01.HS01		02.09.2024	AK
&ELU +LT01.HS01=REPORT	3	S2:Montageplatte		02.09.2024	AK
&EMA3 +UT01 =REPORT	1	connector overview		03.09.2024	AK
&EMA4 +UT01 =REPORT	1	Connector layout plan : HAR.09 14 024 0371		16.01.2025	
&EMA4 +UT01 =REPORT	2	Connector layout plan : HAR.09 14 024 0371		16.01.2025	
&EMA4 +UT01 =REPORT	3	Connector layout plan : WIE.GST15I2S B1 ZR1W WS		13.01.2025	AK
&EMA4 +UT01 =REPORT	4	Connector layout plan : WIE.GST15I2S B1 ZR1W WS		13.01.2025	AK
&EMA4 +UT01 =REPORT	5	Connector layout plan : WIE.GST15I2S B1 ZR1W WS		13.01.2025	AK
&EMA4 +UT01 =REPORT	6	Connector layout plan : WIE.GST15I2S B1 ZR1W WS		13.01.2025	AK
&EMA4 +UT01 =REPORT	7	Connector layout plan : WIE.GST15I2S B1 ZR1W WS		13.01.2025	AK
&EMA4 +UT01 =REPORT	8	Connector layout plan : WIE.GST15I2S B1 ZR1W WS		13.01.2025	AK

Table of contents

3CON Anlagenbau GmbH
Kleinfeld 16
A-6341 Ebbs

[3CON]_F06_001_V01

Function designation	Page	Page description	Notes	Date	Processor
=REPORT		**Project-related evaluations**			
&EMA4 +UT01 =REPORT	9	Connector layout plan : WIE.GST15I2S B1 ZR1W WS		13.01.2025	AK
&EMA4 +UT01 =REPORT	10	Connector layout plan : WIE.GST15I2S B1 ZR1W WS		13.01.2025	AK
&EPA +UT01 =REPORT	1	Equipment list		29.11.2024	AK
&EPC1 +UT01 =REPORT	1	Article Sum BOM		16.01.2025	
&EPC1 +UT01 =REPORT	2	Article Sum BOM		16.01.2025	
&EPC1 +UT01 =REPORT	3	Article Sum BOM		16.01.2025	
&EPC1 +UT01 =REPORT	4	Article Sum BOM		13.01.2025	AK
&ELU +UT01.X01 =REPORT	1	S1:Montageplatte		02.09.2024	AK
&ELU +UT01.X01 =REPORT	2	UT01.X01		02.09.2024	AK
&ELU +UT01.X01 =REPORT	3	S1:Montageplatte		02.09.2024	AK
&ELU +UT01.X01 =REPORT	4	S1:Montageplatte		02.09.2024	AK
&ELU +UT01.X01 =REPORT	5	UT01.X01		02.09.2024	AK
&ELU +UT01.X01 =REPORT	6	S1:Montageplatte		02.09.2024	AK
&ELU +UT01.X01 =REPORT	7	S2:Montageplatte		16.01.2025	
&ELU +UT01.X01 =REPORT	8	S2:Montageplatte		16.01.2025	
&EMA1 +UT01.X01 =REPORT	1	Terminal-strip overview		02.09.2024	AK
&EMA2 +UT01.X01 =REPORT	1	Klemmenplan ==1005803+UT01.X01-XD.21		03.09.2024	AK
&EMA2 +UT01.X01 =REPORT	2	Klemmenplan ==1005803+UT01.X01-XD.22		03.09.2024	AK
&EMA2 +UT01.X01 =REPORT	3	Klemmenplan ==1005803+UT01.X01-XD.24		03.09.2024	AK
&EMA2 +UT01.X01 =REPORT	4	Klemmenplan ==1005803+UT01.X01-XD.25		03.09.2024	AK
&EMA2 +UT01.X01 =REPORT	5	Klemmenplan ==1005803+UT01.X01-XE		03.09.2024	AK
&EPA +UT01.X01 =REPORT	1	Equipment list		03.09.2024	AK
&EPC1 +UT01.X01 =REPORT	1	Article Sum BOM		16.01.2025	
&EPC1 +UT01.X01 =REPORT	2	Article Sum BOM		16.01.2025	
&EPC1 +UT01.X01 =REPORT	3	Article Sum BOM		16.01.2025	

Table of contents

3CON Anlagenbau GmbH
Kleinfeld 16
A-6341 Ebbs

[3CON]_F06_001_V01

Function designation	Page	Page description	Notes	Date	Processor
=REPORT		**Project-related evaluations**			
&ELU +LT01.HS01.X01 =REPORT	1	S1:Montageplatte		02.09.2024	AK
&ELU +LT01.HS01.X01 =REPORT	2	LT01.HS01.X01		02.09.2024	AK
&ELU +LT01.HS01.X01 =REPORT	3	S1:Montageplatte		02.09.2024	AK

IEC 61439-2

Standard	IEC 61439-2	Protection class	IP43 (external): Indoor installation	IP2X / IPXXB (internal)	
Grid form (feed-in)	TN-S	Basic protection	Protection by housing	Fault protection	Protection through automatic switch-off
Rated voltage			Un = 4X0V	Rated current (switchgear combination)	InA = **XXX**
Rated insulation voltage			Ui = 4X0V	Rated load factor (switchgear combination)	RDF = 0,9
Rated impulse withstand voltage			Uimp = 2,5kV (Cat. II)	Rated impulse withstand current (switchgear and controlgear assembly)	Ipk = 35kA
Rated frequency			fn = 50Hz		
Rated short-circuit current, conditional (back-up fuse)			Icc = XXXkA	Recommended fuse	Siemens 3NA3xxx (IEC 60269-3-1)
Current limiting properties (back-up fuse)			I²t = XXXXXXXA²S	min. Cable cross-section 35mm² for connecting cable Cable dimensioning of the connecting cable must be carried out by the operator of the system.	
Rated current (circuits)		Übersetzung fehlt			
Auxiliary circuits			Vaux = 24VDC		
		Electromagnetic compatibility		EMC immunity	Environment A
				EMC interference emission	Environment B
Installation type			stationary	CONFIRMATION	
Installation height			<2000m		
Ambient air temperature			-5°C - +40°C		
Maximum average ambient air temperature in 24h			+35°C		
Relative humidity			< 70%		
Degree of soiling			3		
Weight			~ 580kg	Date	Signature

&BAB/7 &EEC/1

IMPLEMENTATION REGULATIONS

WIRING REGULATIONS

(Symbol in accordance with IEC 60757)

WIRING COLORS

Main current AC	black (BK)	Control circuit AC > 50V	red (RD) after Control transformer	External voltage	orange (OG)
Main current DC	black (BK)	Control circuit AC < 50V	red (RD) after Control transformer	Interlock circuit	orange (OG)
Neutral conductor	blue (BU)	Control circuit 24Vdc	dark blue (DBU)	Measuring lines	white (WH)
Protective wire	green-yellow (GNYE)	Control circuit GND	dark blue/white (DBU/WH)		

MINIMUM CROSS-SECTIONS

Main current	1,5 mm²
Protective wire	1,5 mm²
Control line	1.0 mm²
PLC wiring	0.5 mm²

WIRING

0.5 - 1.0 mm²	H05V-K PVC conductor line
1.5 - 150 mm²	H07V-K PVC conductor line
Wire end finishing	not required

MATERIAL REGULATIONS

ENCLOSURES

Enclosures	RITTAL VX25
Enclosure base	RITTAL VX25
Enclosure color	RAL 7035

LABELING

Operating resources	Standard
Single wires	not required

CONFIRMATION

Date Signature

Structure identifier overview

3CON Anlagenbau GmbH
Kleinfeld 16
A-6341 Ebbs

[3CON]_F24_002_V01_2

Project	Type
1005803	BR 449_IP lower center cover+glove box_LHD_EDGE_TOOL_1+0_1+0
ANLAGE	

Structure identifier overview

3CON Anlagenbau GmbH
Kleinfeld 16
A-6341 Ebbs

[3CON]_F24_002_V01

Complete designation	Labeling	Structure description
&BAA	Dokumentenart	Title / cover page
&BAB	Dokumentenart	Table of contents
&EDB	Dokumentenart	Structure description
&EEB	Dokumentenart	Standards and guidelines
&EEC	Dokumentenart	Safety instructions / Technical implementation regulations
&EFA	Dokumentenart	Functional overview documents
&EFA2	Dokumentenart	PLC diagram
&EFA3	Dokumentenart	PLC card overview
&EFS	Dokumentenart	Wiring diagram
&EFS1	Dokumentenart	Electrical engineering schematic
&ELU	Dokumentenart	In/on-equipment location documents
&EMA1	Dokumentenart	Terminal strip overview
&EMA2	Dokumentenart	Terminal diagram
&EMA3	Dokumentenart	Connector overview
&EMA4	Dokumentenart	Connector layout plan
&EPA	Dokumentenart	Material lists
&EPC1	Dokumentenart	Article sum BOM
+B01	Ortskennzeichen	Base
+B02	Ortskennzeichen	Lift table
+B03	Ortskennzeichen	Turntable
+LT01	Ortskennzeichen	lower tool 1
+LT01.HS01	Ortskennzeichen	Heating shuttle 1 lower tool 1
+LT01.HS01.X01	Ortskennzeichen	Terminal box heatingshuttle 1 lower tool 1
+LT01.X01	Ortskennzeichen	Terminal box lower tool 1
+LT02	Ortskennzeichen	Lower tool 2
+UT01	Ortskennzeichen	Upper tool 1

Structure identifier overview

3CON Anlagenbau GmbH
Kleinfeld 16
A-6341 Ebbs

[3CON]_F24_002_V01

Complete designation	Labeling	Structure description
+UT01.X01	Ortskennzeichen	Terminal box upper tool 1
+UT02	Ortskennzeichen	Upper tool 2
==1005803	Funktionale Zuordnung	BR 449_IP lower center cover+glove box_LHD_EDGE_TOOL_1+0_1+0
=AA	Funktionskennzeichen	General installations
=AC	Funktionskennzeichen	Installation control cabinet tempering
=BA05	Funktionskennzeichen	Component-recognition
=EA	Funktionskennzeichen	process water
=EC	Funktionskennzeichen	Heating system AH
=EC.01	Funktionskennzeichen	
=EC.02	Funktionskennzeichen	
=EC.03	Funktionskennzeichen	
=EC.04	Funktionskennzeichen	
=EC.05	Funktionskennzeichen	
=EC.06	Funktionskennzeichen	
=EC.07	Funktionskennzeichen	
=EC.08	Funktionskennzeichen	
=GB	Funktionskennzeichen	Power AC
=GD24	Funktionskennzeichen	Power DC (24Vdc)
=GE	Funktionskennzeichen	POT equalization
=GK	Funktionskennzeichen	Energy air
=GM	Funktionskennzeichen	Energy measurement
=GN	Funktionskennzeichen	N-distribution
=GQ	Funktionskennzeichen	Energy vacuum
=KF01	Funktionskennzeichen	Control
=KH	Funktionskennzeichen	Fluidic signal object
=MC01	Funktionskennzeichen	Slider

Structure identifier overview

3CON Anlagenbau GmbH
Kleinfeld 16
A-6341 Ebbs

[3CON]_F24_002_V01

Complete designation	Labeling	Structure description
=MC02	Funktionskennzeichen	Edge-folding
=MC02.01	Funktionskennzeichen	
=MC02.02	Funktionskennzeichen	
=MC02.03	Funktionskennzeichen	
=MC02.04	Funktionskennzeichen	
=MC02.05	Funktionskennzeichen	
=MC02.06	Funktionskennzeichen	
=MC02.07	Funktionskennzeichen	
=MC02.08	Funktionskennzeichen	
=MC02.09	Funktionskennzeichen	
=MC02.10	Funktionskennzeichen	
=MC02.11	Funktionskennzeichen	
=MC02.12	Funktionskennzeichen	
=MC02.13	Funktionskennzeichen	
=MC02.14	Funktionskennzeichen	
=MC02.15	Funktionskennzeichen	
=ME	Funktionskennzeichen	Drives controlled (servo)
=ME.1	Funktionskennzeichen	Drive lift table
=ME.3	Funktionskennzeichen	Drive turn table
=ML06	Funktionskennzeichen	Gripper/Needles
=PLC	Funktionskennzeichen	PLC control
=REPORT	Funktionskennzeichen	Project-related evaluations
=SA	Funktionskennzeichen	Push buttons
=TC	Funktionskennzeichen	Tool change
=TC.CS1	Funktionskennzeichen	Clamping system typ 1
=TC.CS2	Funktionskennzeichen	Clamping system typ 2

Structure identifier overview

3CON Anlagenbau GmbH
Kleinfeld 16
A-6341 Ebbs

[3CON]_F24_002_V01

Complete designation	Labeling	Structure description
=XQHC	Funktionskennzeichen	Hot contact welding
=XS	Funktionskennzeichen	Connecting systems (docking station)

lower tool 1
+LT01

Terminal box lower tool 1
+LT01.X01

=PLC
PLC control

=XS
lower tool 1

A1-YE
A2-OG
A3-WH
A4-BU

=XS+LT01&EFS/1.0
-XS1
A1

=XS+LT01&EFS/1.0
XS1
A1
=GD24+LT01.X01&EFS/1.2
XS1

-WGB1
M12 FD
2x2xAWG22 - 5m
PN Cat.5

-KEC1 =PLC+LT01.X01&EFS/1.0
Siemens
6ES7155-6AA01-0BN0
IM 155-6PN ST incl. BA 2xRJ45
-KF1
CPU: TIA100XXXX.S7_CPU.1
P1 PN
192.168.0.2
255.255.255.0
P2 PN
CPU: TIA100XXXX.S7_CPU.1

-WGB2
FD 2x2xAWG22
PN Cat.5 FD

-CFA1 =PLC+LT01.X01&EFS/3.2
W&T
pure.box 3
1 ETH
CPU: TIA100XXXX.S7_CPU.1
IP address: 192.168.0.1
Subnet: 255.255.255.0

==&EDB/5

2

			Job name DAG_BR 449_IP_VAC+EDGE+ITG+WELD+PUNCH		Job number 1011002189	IEC	3CON Anlagenbau GmbH	Bus overview LT01	==1005803	=	&EFA
			BR 449_IP lower center cover+glove box_LHD_EDGE_TOOL_1+0_1+0		Drawing number 1005803	Version					Functional overview documents
										+	Page 1
Modification	Date	Name	Creator AK Andreas Krischker	Approved by				last Editor AK Andreas Krischker	Date 02.09.2024		Sheet 16 from 122

Upper tool 1
+UT01

Terminal box upper tool 1
+UT01.X01

=XS
Upper tool 1

A1-YE
A2-OG
A3-WH
A4-BU

-WGB1
FD 2x2xAWG22
PN Cat.5 FD

=XS+UT01&EFS/1.0
-XS1 A1
A1
=XS+UT01&EFS/1.0 / XS1 → XS1 / =GD24+UT01.X01&EFS/1.2

=PLC
PLC control

-KEC1 =PLC+UT01.X01&EFS/1.0
Siemens
6ES7155-6AA01-0BN0
IM 155-6PN ST incl. BA 2xRJ45
-KF1 **CPU:** TIA100XXXX.S7_CPU.1
P1 PN
192.168.0.3
255.255.255.0
P2 PN
CPU: TIA100XXXX.S7_CPU.1

1

=GE+LT01&EFS/1

			Job name DAG_BR 449_IP_VAC+EDGE+ITG+WELD+PUNCH		Job number 1011002189	IEC	3CON Anlagenbau GmbH	Bus overview UT01	==1005803	=	&EFA
			BR 449_IP lower center cover+glove box_LHD_EDGE_TOOL_1+0_1+0								Functional overview documents
					Drawing number 1005803	Version				+	Page 2
Modification	Date	Name	Creator AK Andreas Krischker	Approved by				last Editor AK Andreas Krischker	Date 02.09.2024		Sheet 17 from 122

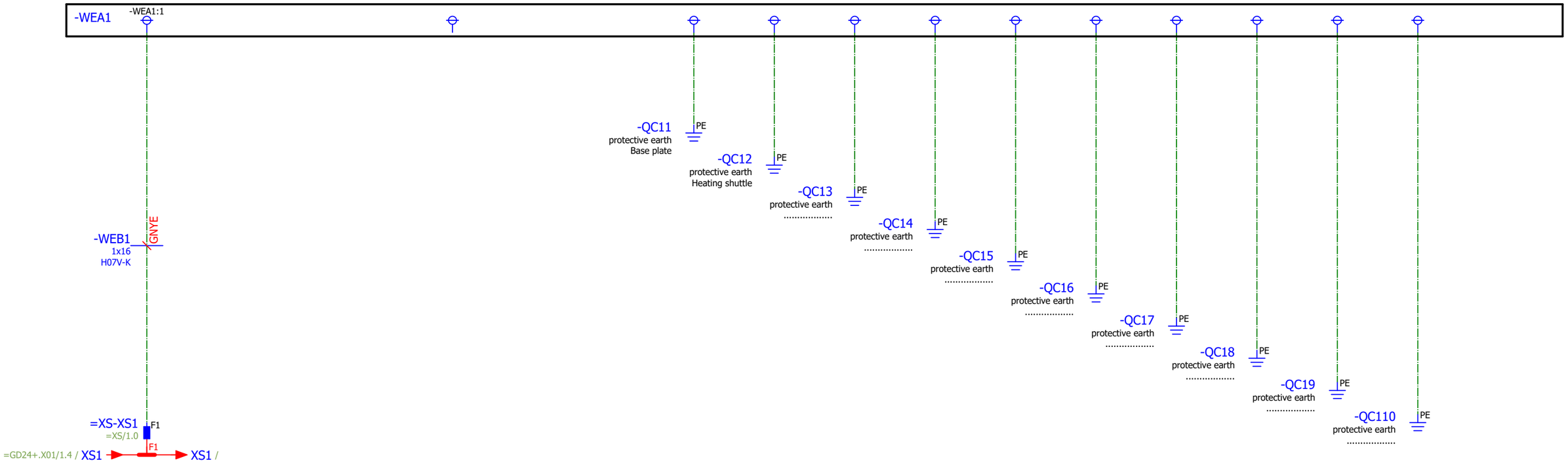

=+&EFA/2

+UT01/1

			Job name DAG_BR 449_IP_VAC+EDGE+ITG+WELD+PUNCH		Job number 1011002189	IEC	3CON Anlagenbau GmbH	Potential eqalization	==1005803	=GE	&EFS
			BR 449_IP lower center cover+glove box_LHD_EDGE_TOOL_1+0_1+0		Drawing number 1005803	Version				POT equalization	Wiring diagram
										+LT01	Page 1
Modification	Date	Name	Creator AK Andreas Krischker	Approved by				last Editor AK Andreas Krischker	Date 02.09.2024	lower tool 1	Sheet 18 from 122

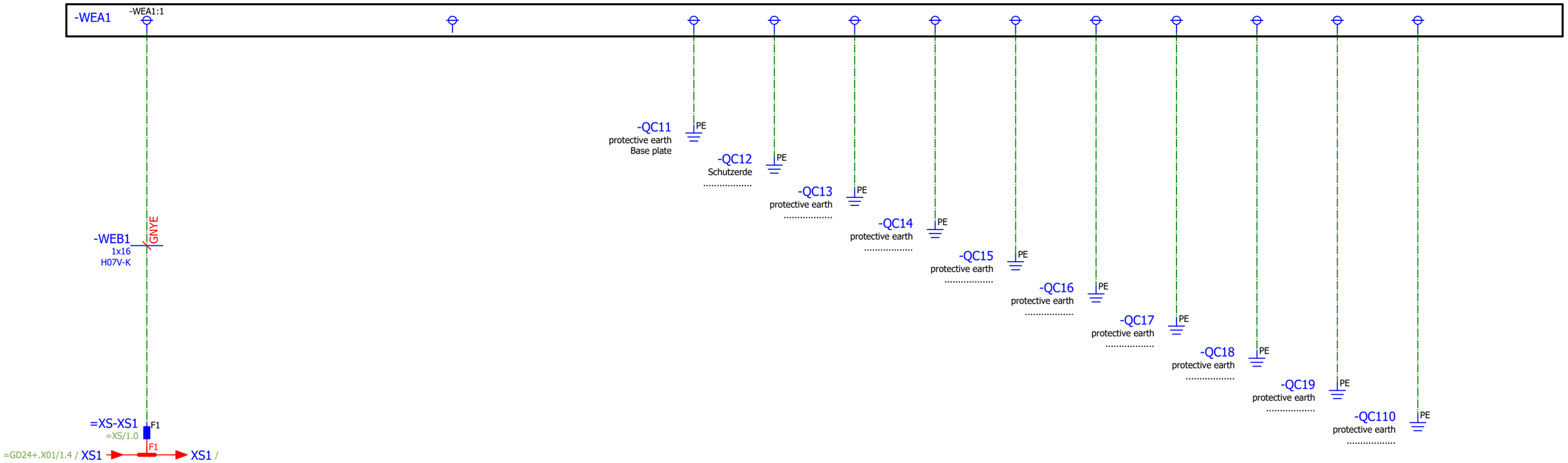

+LT01/1

=GD24+LT01.X01/1

			Job name DAG_BR 449_IP_VAC+EDGE+ITG+WELD+PUNCH		Job number 1011002189	IEC	3CON Anlagenbau GmbH	Potential eqalization	==1005803	=GE	&EFS
			BR 449_IP lower center cover+glove box_LHD_EDGE_TOOL_1+0_1+0		Drawing number 1005803	Version				POT equalization	Wiring diagram
										+UT01	Page 1
Modification	Date	Name	Creator AK Andreas Krischker	Approved by				last Editor AK Andreas Krischker	Date 02.09.2024	Upper tool 1	Sheet 19 from 122

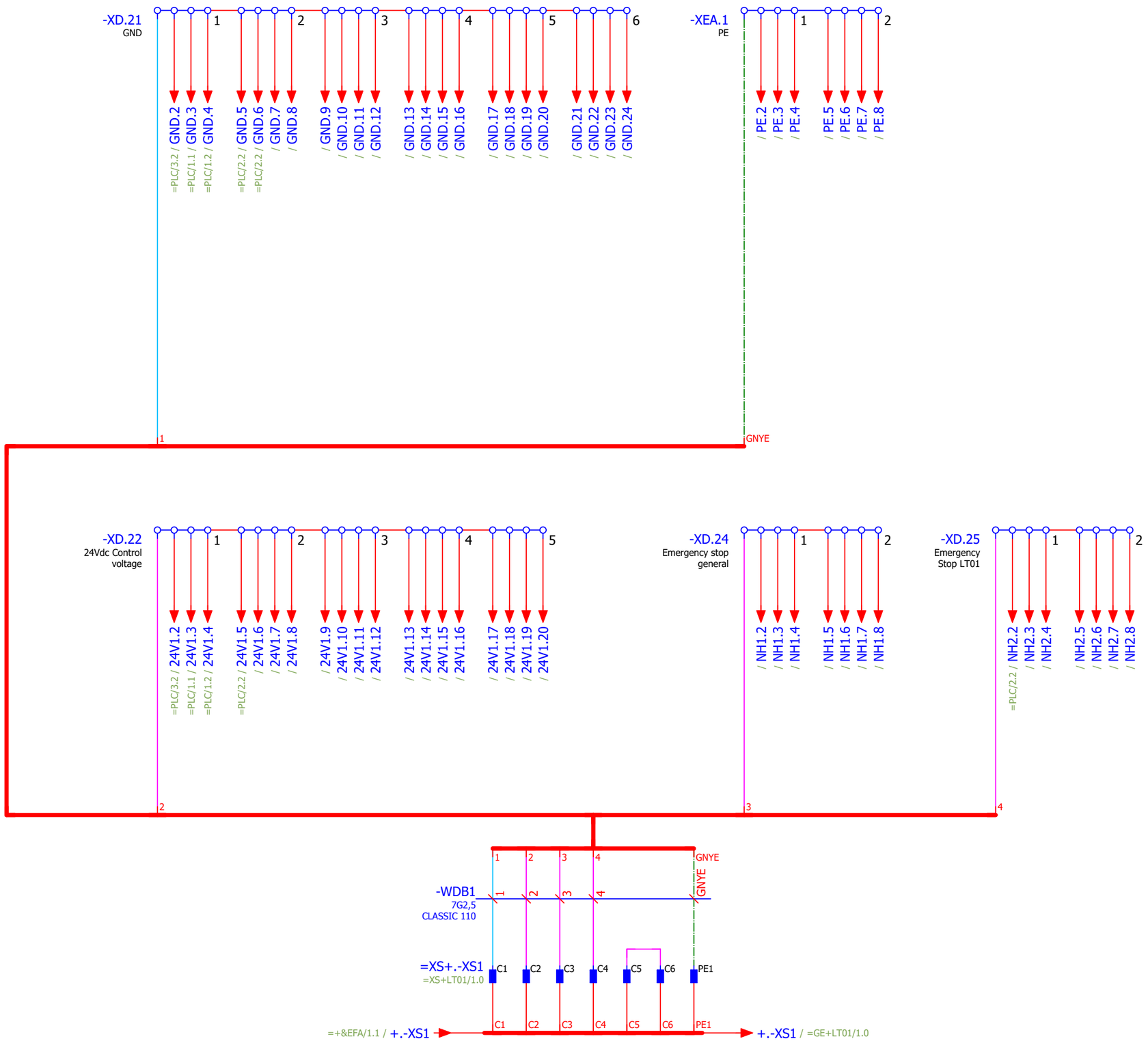

=GE+UT01/1

+UT01.X01/1

			Job name DAG_BR 449_IP_VAC+EDGE+ITG+WELD+PUNCH		Job number 1011002189	IEC	3CON Anlagenbau GmbH	Potential distribution	==1005803	=GD24	&EFS
			BR 449_IP lower center cover+glove box_LHD_EDGE_TOOL_1+0_1+0							Power DC (24Vdc)	Wiring diagram
					Drawing number 1005803	Version				+LT01.X01	Page 1
Modification	Date	Name	Creator AK Andreas Krischker	Approved by				last Editor AK Andreas Krischker	Date 03.09.2024	lower tool 1	Sheet 20 from 122

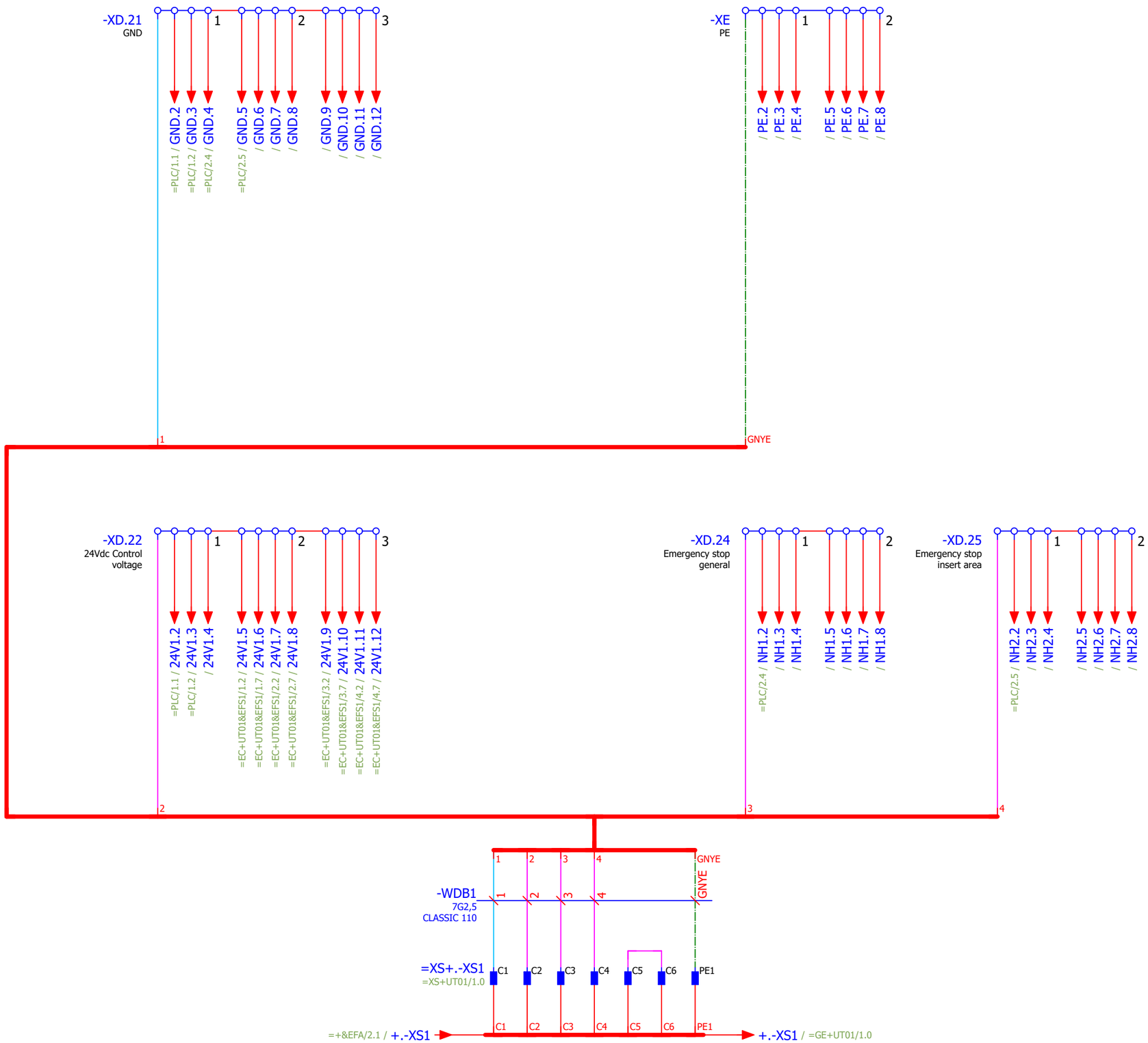

+LT01.X01/1

=GN+UT01/1

			Job name DAG_BR 449_IP_VAC+EDGE+ITG+WELD+PUNCH		Job number 1011002189	IEC	3CON Anlagenbau GmbH	Potential distribution	==1005803	=GD24	&EFS
			BR 449_IP lower center cover+glove box_LHD_EDGE_TOOL_1+0_1+0		Drawing number 1005803	Version				Power DC (24Vdc)	Wiring diagram
										+UT01.X01	Page 1
Modification	Date	Name	Creator AK Andreas Krischker	Approved by				last Editor AK Andreas Krischker	Date 03.09.2024	Upper tool 1	Sheet 21 from 122

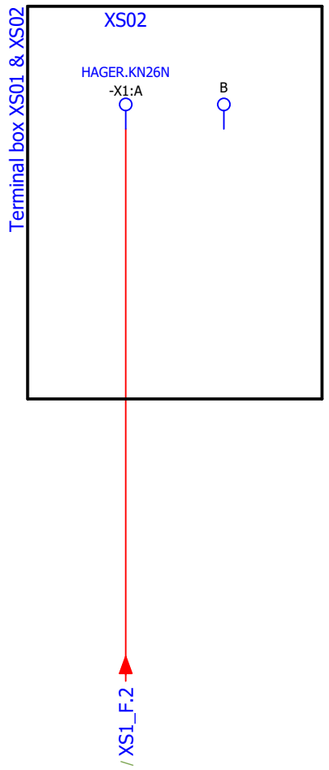
Terminal box XS01 & XS02
XS02
HAGER.KN26N
-X1:A
B
/ XS1_F.2

PLC diagram

IO-Test: _____ Date _____ Electrician _____ Programmer

DT: =PLC+LT01.X01-KE1

Placement: =PLC+LT01.X01&EFS/1.2
Type: ET 200SP DI 8x24VDC ST 6ES7131-6BF01-0BA0

IO-Test

Address	symbol name	Function text	/Page . path	
I11000.0 :1/DI0	==1005803=BA05+LT01-BGB1:4	Part detection 1.2.1	=BA05+LT01&EFS/1.0	
I11000.1 :2/DI1	==1005803=BA05+LT01-BGB2:4	Part detection 1.2.2	=BA05+LT01&EFS/1.1	
I11000.2 :3/DI2	==1005803=BA05+LT01-BGB3:4	Part detection 2.4.1	=BA05+LT01&EFS/1.2	
I11000.3 :4/DI3	==1005803=BA05+LT01-BGB4:4	Part detection 2.4.2	=BA05+LT01&EFS/1.3	
I11000.4 :5/DI4	I11000.4		=BA05+LT01&EFS/1.4	
I11000.5 :6/DI5	I11000.5		=BA05+LT01&EFS/1.5	
I11000.6 :7/DI6	I11000.6		=BA05+LT01&EFS/1.6	
I11000.7 :8/DI7	I11000.7		=BA05+LT01&EFS/1.7	

DT: =PLC+LT01.X01-KE2

Placement: =PLC+LT01.X01&EFS/1.2
Type: ET 200SP DI 8x24VDC ST 6ES7131-6BF01-0BA0

IO-Test

Address	symbol name	Function text	/Page . path	
I11001.0 :1/DI0	==1005803=MC01+LT01-BGB1:4	Slider 1.1.1.1 HP	=MC01+LT01&EFS/1.0	
I11001.1 :2/DI1	==1005803=MC01+LT01-BGB2:4	Slider 1.1.2.1 HP	=MC01+LT01&EFS/1.1	
I11001.2 :3/DI2	==1005803=MC01+LT01-BGB3:4	Slider 1.2.1.1 HP	=MC01+LT01&EFS/1.2	
I11001.3 :4/DI3	==1005803=MC01+LT01-BGB4:4	Support slider 1.7.1.1 HP	=MC01+LT01&EFS/1.3	
I11001.4 :5/DI4	==1005803=MC01+LT01-BGB5:4	Slider 2.1.1.1 HP	=MC01+LT01&EFS/1.4	
I11001.5 :6/DI5	==1005803=MC01+LT01-BGB6:4	Slider 2.1.2.1 HP	=MC01+LT01&EFS/1.5	
I11001.6 :7/DI6	==1005803=MC01+LT01-BGB7:4	Slider 2.2.1.1 HP	=MC01+LT01&EFS/1.6	
I11001.7 :8/DI7	==1005803=MC01+LT01-BGB8:4	Slider 2.3.1.1 HP	=MC01+LT01&EFS/1.7	

DT: =PLC+LT01.X01-KE3

Placement: =PLC+LT01.X01&EFS/1.3
Type: ET 200SP DI 8x24VDC ST 6ES7131-6BF01-0BA0

IO-Test

Address	symbol name	Function text	/Page . path	
I11002.0 :1/DI0	==1005803=MC01+LT01-BGB9:4	Support slider 2.7.1.1 HP	=MC01+LT01&EFS/2.0	
I11002.1 :2/DI1	==1005803=MC01+LT01-BGB10:4	Support slider 1.7.2.1 HP	=MC01+LT01&EFS/2.1	
I11002.2 :3/DI2	I11002.2		=MC01+LT01&EFS/2.2	
I11002.3 :4/DI3	I11002.3		=MC01+LT01&EFS/2.3	
I11002.4 :5/DI4	I11002.4		=MC01+LT01&EFS/2.4	
I11002.5 :6/DI5	I11002.5		=MC01+LT01&EFS/2.5	
I11002.6 :7/DI6	I11002.6		=MC01+LT01&EFS/2.6	
I11002.7 :8/DI7	I11002.7		=MC01+LT01&EFS/2.7	

DT: =PLC+LT01.X01-KE4

Placement: =PLC+LT01.X01&EFS/1.4
Type: ET 200SP DI 8x24VDC ST 6ES7131-6BF01-0BA0

IO-Test

Address	symbol name	Function text	/Page . path	
I11003.0 :1/DI0	==1005803=MC02.01+LT01-BGB1:4	Edge-fold slider HO 1.3.1.1 HP	=MC02+LT01&EFS/1.0	
I11003.1 :2/DI1	==1005803=MC02.01+LT01-BGB2:4	Edge-fold slider VE 1.3.1.1 HP	=MC02+LT01&EFS/1.1	
I11003.2 :3/DI2	==1005803=MC02.02+LT01-BGB1:4	Edge-fold slider HO 1.3.2.1 HP	=MC02+LT01&EFS/1.2	
I11003.3 :4/DI3	==1005803=MC02.02+LT01-BGB2:4	Edge-fold slider VE 1.3.2.1 HP	=MC02+LT01&EFS/1.3	
I11003.4 :5/DI4	==1005803=MC02.03+LT01-BGB1:4	Edge-fold slider HO 1.3.3.1 HP	=MC02+LT01&EFS/1.4	
I11003.5 :6/DI5	==1005803=MC02.03+LT01-BGB2:4	Edge-fold slider VE 1.3.3.1 HP	=MC02+LT01&EFS/1.5	
I11003.6 :7/DI6	==1005803=MC02.04+LT01-BGB1:4	Edge-fold slider HO 1.4.1.1 HP	=MC02+LT01&EFS/1.6	
I11003.7 :8/DI7	==1005803=MC02.04+LT01-BGB2:4	Edge-fold slider VE 1.4.1.1 HP	=MC02+LT01&EFS/1.7	

DT: =PLC+LT01.X01-KE5

Placement: =PLC+LT01.X01&EFS/1.4
Type: ET 200SP DI 8x24VDC ST 6ES7131-6BF01-0BA0

IO-Test

Address	symbol name	Function text	/Page . path	
I11004.0 :1/DI0	==1005803=MC02.05+LT01-BGB1:4	Edge-fold slider HO 1.4.2.1 HP	=MC02+LT01&EFS/2.0	
I11004.1 :2/DI1	==1005803=MC02.05+LT01-BGB2:4	Edge-fold slider VE 1.4.2.1 HP	=MC02+LT01&EFS/2.1	
I11004.2 :3/DI2	==1005803=MC02.06+LT01-BGB1:4	Edge-fold slider HO 1.4.3.1 HP	=MC02+LT01&EFS/2.2	
I11004.3 :4/DI3	==1005803=MC02.06+LT01-BGB2:4	Edge-fold slider VE 1.4.3.1 HP	=MC02+LT01&EFS/2.3	
I11004.4 :5/DI4	==1005803=MC02.07+LT01-BGB1:4	Edge-fold slider HO 1.5.1.1 HP	=MC02+LT01&EFS/2.4	
I11004.5 :6/DI5	==1005803=MC02.07+LT01-BGB2:4	Edge-fold slider VE 1.5.1.1 HP	=MC02+LT01&EFS/2.5	
I11004.6 :7/DI6	==1005803=MC02.08+LT01-BGB1:4	Edge-fold slider HO 1.5.2.1 HP	=MC02+LT01&EFS/2.6	
I11004.7 :8/DI7	==1005803=MC02.08+LT01-BGB2:4	Edge-fold slider VE 1.5.2.1 HP	=MC02+LT01&EFS/2.7	

DT: =PLC+LT01.X01-KE6

Placement: =PLC+LT01.X01&EFS/1.5
Type: ET 200SP DI 8x24VDC ST 6ES7131-6BF01-0BA0

IO-Test

Address	symbol name	Function text	/Page . path	
I11005.0 :1/DI0	==1005803=MC02.09+LT01-BGB1:4	Edge-fold slider HO 1.6.1.1 HP	=MC02+LT01&EFS/3.0	
I11005.1 :2/DI1	==1005803=MC02.09+LT01-BGB2:4	Edge-fold slider VE 1.6.1.1 HP	=MC02+LT01&EFS/3.1	
I11005.2 :3/DI2	==1005803=MC02.10+LT01-BGB1:4	Edge-fold slider HO 2.4.1.1 HP	=MC02+LT01&EFS/3.2	
I11005.3 :4/DI3	==1005803=MC02.10+LT01-BGB2:4	Edge-fold slider VE 2.4.1.1 HP	=MC02+LT01&EFS/3.3	
I11005.4 :5/DI4	==1005803=MC02.11+LT01-BGB1:4	Edge-fold slider HO 2.4.2.1 HP	=MC02+LT01&EFS/3.4	
I11005.5 :6/DI5	==1005803=MC02.11+LT01-BGB2:4	Edge-fold slider VE 2.4.2.1 HP	=MC02+LT01&EFS/3.5	
I11005.6 :7/DI6	==1005803=MC02.12+LT01-BGB1:4	Edge-fold slider HO 2.5.1.1 HP	=MC02+LT01&EFS/3.6	
I11005.7 :8/DI7	==1005803=MC02.12+LT01-BGB2:4	Edge-fold slider VE 2.5.1.1 HP	=MC02+LT01&EFS/3.7	

PLC diagram

IO-Test: _____ Date _____ Electrician _____ Programmer

DT: =PLC+LT01.X01-KE7

Placement: =PLC+LT01.X01&EFS/1.6
Type: ET 200SP DI 8x24VDC ST 6ES7131-6BF01-0BA0
IO-Test

Address	symbol name	Function text	/Page . path
I11006.0 :1/DI0	==1005803=MC02.13+LT01-BGB1:4	Edge-fold slider HO 2.6.1.1 HP	=MC02+LT01&EFS/4.0
I11006.1 :2/DI1	==1005803=MC02.13+LT01-BGB2:4	Edge-fold slider VE 2.6.1.1 HP	=MC02+LT01&EFS/4.1
I11006.2 :3/DI2	==1005803=MC02.14+LT01-BGB1:4	Edge-fold slider HO 2.6.2.1 HP	=MC02+LT01&EFS/4.2
I11006.3 :4/DI3	==1005803=MC02.14+LT01-BGB2:4	Edge-fold slider VE 2.6.2.1 HP	=MC02+LT01&EFS/4.3
I11006.4 :5/DI4	==1005803=MC02.15+LT01-BGB1:4	Edge-fold slider HO 2.6.3.1 HP	=MC02+LT01&EFS/4.4
I11006.5 :6/DI5	==1005803=MC02.15+LT01-BGB2:4	Edge-fold slider VE 2.6.3.1 HP	=MC02+LT01&EFS/4.5
I11006.6 :7/DI6	I11006.6		=MC02+LT01&EFS/4.6
I11006.7 :8/DI7	I11006.7		=MC02+LT01&EFS/4.7

DT: =PLC+LT01.X01-KE8

Placement: =PLC+LT01.X01&EFS/1.6
Type: ET 200SP DI 8x24VDC ST 6ES7131-6BF01-0BA0
IO-Test

Address	symbol name	Function text	/Page . path
I11007.0 :1/DI0	==1005803=SA+LT01-SJC1:14	Button release part IP 1.1.1	=SA+LT01&EFS/1.0
I11007.1 :2/DI1	==1005803=SA+LT01-SJC2:14	Button release part GB 2.1.1	=SA+LT01&EFS/1.5
I11007.2 :3/DI2	I11007.2		
I11007.3 :4/DI3	I11007.3		
I11007.4 :5/DI4	I11007.4		
I11007.5 :6/DI5	I11007.5		
I11007.6 :7/DI6	I11007.6		
I11007.7 :8/DI7	I11007.7		

DT: =PLC+LT01.X01-KE9

Placement: =PLC+LT01.X01&EFS/2.1
Type: ET 200SP AI 4xRTD/TC 2-/4-WIRE HF 6ES7134-6JD00-0CA1
IO-Test

Address	symbol name	Function text	/Page . path
IW11100 :1/M0+	==1005803=EA+LT01-BTA1:+	Nest temperature LT 1.3.1	=EA+LT01&EFS/1.0
IW11102 :2/M1+	==1005803=EA+LT01-BTA2:+	Sliders temperature 1.4.1	=EA+LT01&EFS/1.1
IW11104 :3/M2+	==1005803=EA+LT01-BTA3:+	Nest temperature LT 2.2.1	=EA+LT01&EFS/1.2
IW11106 :4/M3+	==1005803=EA+LT01-BTA4:+	Sliders temperature 2.3.1	=EA+LT01&EFS/1.3

DT: =PLC+LT01.X01-KE10

Placement: =PLC+LT01.X01&EFS/2.2
Type: ET 200SP DQ 8x24VDC 0,5A ST 6ES7132-6BF01-0BA0
IO-Test

Address	symbol name	Function text	/Page . path
Q11000.0 :1/DQ0	==1005803=PLC+LT01.X01-KFA1:A1	Reset web and application server	&EFS/3.8
Q11000.1 :2/DQ1	Q11000.1		

DT: =PLC+LT01.X01-KE10

Placement: =PLC+LT01.X01&EFS/2.2
Type: ET 200SP DQ 8x24VDC 0,5A ST 6ES7132-6BF01-0BA0
IO-Test

Address	symbol name	Function text	/Page . path
Q11000.2 :3/DQ2	Q11000.2		
Q11000.3 :4/DQ3	Q11000.3		
Q11000.4 :5/DQ4	Q11000.4		
Q11000.5 :6/DQ5	Q11000.5		
Q11000.6 :7/DQ6	Q11000.6		
Q11000.7 :8/DQ7	Q11000.7		

DT: =PLC+LT01.X01-KE11

Placement: =PLC+LT01.X01&EFS/2.2
Type: ET 200SP DQ 16x24VDC 0,5A ST 6ES7132-6BH01-0BA0
IO-Test

Address	symbol name	Function text	/Page . path
Q11001.0 :1/DQ0	==1005803=KH+LT01-KH1-KHB1:14	Slider 1.1 WP	=KH+LT01&EFS1/1.0
Q11001.1 :2/DQ1	==1005803=KH+LT01-KH1-KHB1:12	Slider 1.1 HP	=KH+LT01&EFS1/1.0
Q11001.2 :3/DQ2	Q11001.2	Slider 1.2 WP	=KH+LT01&EFS1/1.1
Q11001.3 :4/DQ3	Q11001.3	Slider 1.2 HP	=KH+LT01&EFS1/1.1
Q11001.4 :5/DQ4	Q11001.4	Edge-fold slider HO 1.3 WP	=KH+LT01&EFS1/1.2
Q11001.5 :6/DQ5	Q11001.5	Edge-fold slider HO 1.3 HP	=KH+LT01&EFS1/1.2
Q11001.6 :7/DQ6	==1005803=KH+LT01-KH1-KHB4:14	Edge-fold slider VE 1.3 WP	=KH+LT01&EFS1/1.2
Q11001.7 :8/DQ7	==1005803=KH+LT01-KH1-KHB4:12	Edge-fold slider VE 1.3 HP	=KH+LT01&EFS1/1.3
Q11002.0 :9/DQ8	==1005803=KH+LT01-KH1-KHB5:14	Edge-fold slider HO 1.4 WP	=KH+LT01&EFS1/1.3
Q11002.1 :10/DQ9	==1005803=KH+LT01-KH1-KHB5:12	Edge-fold slider HO 1.4 HP	=KH+LT01&EFS1/1.3
Q11002.2 :11/DQ10	Q11002.2	Edge-fold slider VE 1.4 WP	=KH+LT01&EFS1/1.4
Q11002.3 :12/DQ11	Q11002.3	Edge-fold slider VE 1.4 HP	=KH+LT01&EFS1/1.4
Q11002.4 :13/DQ12	Q11002.4	Edge-fold slider HO 1.5 WP	=KH+LT01&EFS1/1.5
Q11002.5 :14/DQ13	Q11002.5	Edge-fold slider HO 1.5 HP	=KH+LT01&EFS1/1.5
Q11002.6 :15/DQ14	Q11002.6	Edge-fold slider VE 1.5 WP	=KH+LT01&EFS1/1.5
Q11002.7 :16/DQ15	Q11002.7	Edge-fold slider VE 1.5 HP	=KH+LT01&EFS1/1.6

DT: =PLC+LT01.X01-KE12

Placement: =PLC+LT01.X01&EFS/2.3
Type: ET 200SP DQ 16x24VDC 0,5A ST 6ES7132-6BH01-0BA0
IO-Test

Address	symbol name	Function text	/Page . path
Q11003.0 :1/DQ0	Q11003.0	Edge-fold slider HO 1.6 WP	=KH+LT01&EFS1/1.6
Q11003.1 :2/DQ1	Q11003.1	Edge-fold slider HO 1.6 HP	=KH+LT01&EFS1/1.6
Q11003.2 :3/DQ2	Q11003.2	Edge-fold slider VE 1.6 WP	=KH+LT01&EFS1/1.7
Q11003.3 :4/DQ3	Q11003.3	Edge-fold slider VE 1.6 HP	=KH+LT01&EFS1/1.7
Q11003.4 :5/DQ4	Q11003.4	Support slider 1.7 WP	=KH+LT01&EFS1/1.8

PLC diagram

IO-Test: _____ Date _____ Electrician _____ Programmer

DT:	=PLC+LT01.X01-KE12			IO-Test
Placement:	=PLC+LT01.X01&EFS/2.3			
Type:	ET 200SP DQ 16x24VDC 0,5A ST 6ES7132-6BH01-0BA0			
Address	**symbol name**	**Function text**	**/Page . path**	
Q11003.5 :6/DQ5	Q11003.5	Support slider 1.7 HP	=KH+LT01&EFS1/1.8	
Q11003.6 :7/DQ6	Q11003.6	Reserve valve 1.8 WP	=KH+LT01&EFS1/1.8	
Q11003.7 :8/DQ7	Q11003.7	Reserve valve 1.9 WP	=KH+LT01&EFS1/1.9	
Q11004.0 :9/DQ8	==1005803=KH+LT01-KH2-KHB1:14	Slider 2.1 WP	=KH+LT01&EFS1/2.0	
Q11004.1 :10/DQ9	==1005803=KH+LT01-KH2-KHB1:12	Slider 2.1 HP	=KH+LT01&EFS1/2.0	
Q11004.2 :11/DQ10	Q11004.2	Slider 2.2 WP	=KH+LT01&EFS1/2.1	
Q11004.3 :12/DQ11	Q11004.3	Slider 2.2 HP	=KH+LT01&EFS1/2.1	
Q11004.4 :13/DQ12	Q11004.4	Slider 2.3 WP	=KH+LT01&EFS1/2.2	
Q11004.5 :14/DQ13	Q11004.5	Slider 2.3 HP	=KH+LT01&EFS1/2.2	
Q11004.6 :15/DQ14	==1005803=KH+LT01-KH2-KHB4:14	Edge-fold slider HO 2.4 WP	=KH+LT01&EFS1/2.2	
Q11004.7 :16/DQ15	==1005803=KH+LT01-KH2-KHB4:12	Edge-fold slider HO 2.4 HP	=KH+LT01&EFS1/2.3	

DT:	=PLC+LT01.X01-KE13			IO-Test
Placement:	=PLC+LT01.X01&EFS/2.4			
Type:	ET 200SP DQ 16x24VDC 0,5A ST 6ES7132-6BH01-0BA0			
Address	**symbol name**	**Function text**	**/Page . path**	
Q11005.0 :1/DQ0	==1005803=KH+LT01-KH2-KHB5:14	Edge-fold slider VE 2.4 WP	=KH+LT01&EFS1/2.3	
Q11005.1 :2/DQ1	==1005803=KH+LT01-KH2-KHB5:12	Edge-fold slider VE 2.4 HP	=KH+LT01&EFS1/2.3	
Q11005.2 :3/DQ2	Q11005.2	Edge-fold slider HO 2.5 WP	=KH+LT01&EFS1/2.4	
Q11005.3 :4/DQ3	Q11005.3	Edge-fold slider HO 2.5 HP	=KH+LT01&EFS1/2.4	
Q11005.4 :5/DQ4	Q11005.4	Edge-fold slider VE 2.5 WP	=KH+LT01&EFS1/2.5	
Q11005.5 :6/DQ5	Q11005.5	Edge-fold slider VE 2.5 HP	=KH+LT01&EFS1/2.5	
Q11005.6 :7/DQ6	Q11005.6	Edge-fold slider HO 2.6 WP	=KH+LT01&EFS1/2.5	
Q11005.7 :8/DQ7	Q11005.7	Edge-fold slider HO 2.6 HP	=KH+LT01&EFS1/2.6	
Q11006.0 :9/DQ8	Q11006.0	Edge-fold slider VE 2.6 WP	=KH+LT01&EFS1/2.6	
Q11006.1 :10/DQ9	Q11006.1	Edge-fold slider VE 2.6 HP	=KH+LT01&EFS1/2.6	
Q11006.2 :11/DQ10	Q11006.2	Support slider 2.7 WP	=KH+LT01&EFS1/2.7	
Q11006.3 :12/DQ11	Q11006.3	Support slider 2.7 HP	=KH+LT01&EFS1/2.7	
Q11006.4 :13/DQ12	Q11006.4	Reserve valve 2.8 WP	=KH+LT01&EFS1/2.8	
Q11006.5 :14/DQ13	Q11006.5	Reserve valve 2.9 WP	=KH+LT01&EFS1/2.8	
Q11006.6 :15/DQ14	Q11006.6	Reserve valve 2.10 WP	=KH+LT01&EFS1/2.8	
Q11006.7 :16/DQ15	Q11006.7	Reserve valve 2.11 WP	=KH+LT01&EFS1/2.9	

PLC card overview

3CON Anlagenbau GmbH
Kleinfeld 16
A-6341 Ebbs

[3CON]_F20_002-V2

Device tag PLC	Workstation name Workstation type	Start address IN	Start address OUT	Rack	Module	CPU
-KE1	ET200SP_Station_LT1 ET200SP	11000		0	1	TIA100XXXX.S7_CPU.1
-KE2	ET200SP	11001		0	2	TIA100XXXX.S7_CPU.1
-KE3	ET200SP	11002		0	3	TIA100XXXX.S7_CPU.1
-KE4	ET200SP	11003		0	4	TIA100XXXX.S7_CPU.1
-KE5	ET200SP	11004		0	5	TIA100XXXX.S7_CPU.1
-KE6	ET200SP	11005		0	6	TIA100XXXX.S7_CPU.1
-KE7	ET200SP	11006		0	7	TIA100XXXX.S7_CPU.1
-KE8	ET200SP	11007		0	8	TIA100XXXX.S7_CPU.1
-KE9	ET200SP	11100		0	9	TIA100XXXX.S7_CPU.1
-KE10	ET200SP	11000		0	10	TIA100XXXX.S7_CPU.1
-KE11	ET200SP	11001		0	11	TIA100XXXX.S7_CPU.1
-KE12	ET200SP	11003		0	12	TIA100XXXX.S7_CPU.1
-KE13	ET200SP	11005		0	13	TIA100XXXX.S7_CPU.1

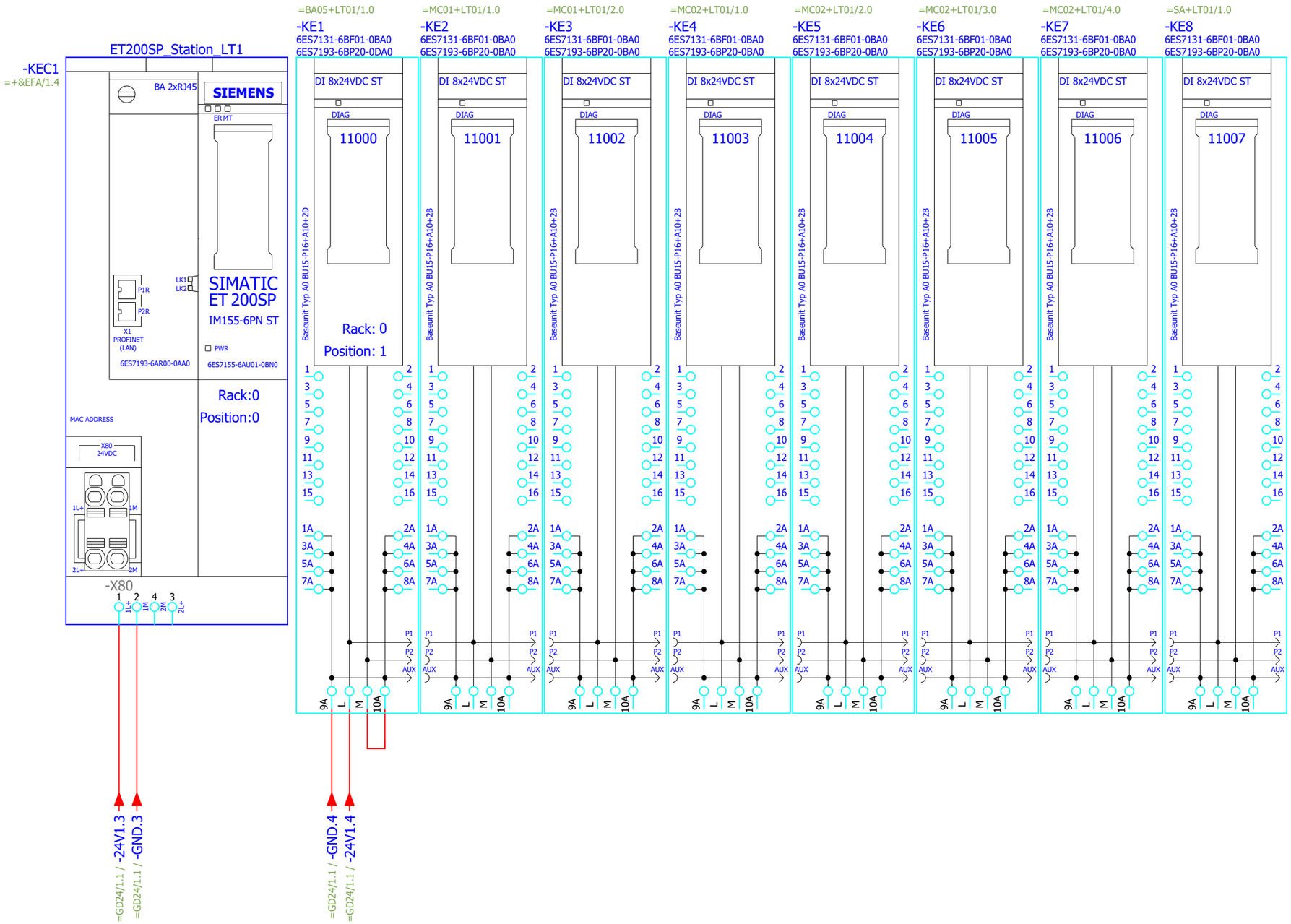

&EFA3/1

2

			Job name DAG_BR 449_IP_VAC+EDGE+ITG+WELD+PUNCH	Job number 1011002189	IEC	3CON Anlagenbau GmbH	PLC-ET200SP	==1005803	=PLC	&EFS
			BR 449_IP lower center cover+glove box_LHD_EDGE_TOOL_1+0_1+0	Drawing number 1005803	Version				PLC control	Wiring diagram
									+LT01.X01	Page 1
Modification	Date	Name	Creator AK Andreas Krischker	Approved by			last Editor AK Andreas Krischker	Date 03.09.2024	lower tool 1	Sheet 27 from 122

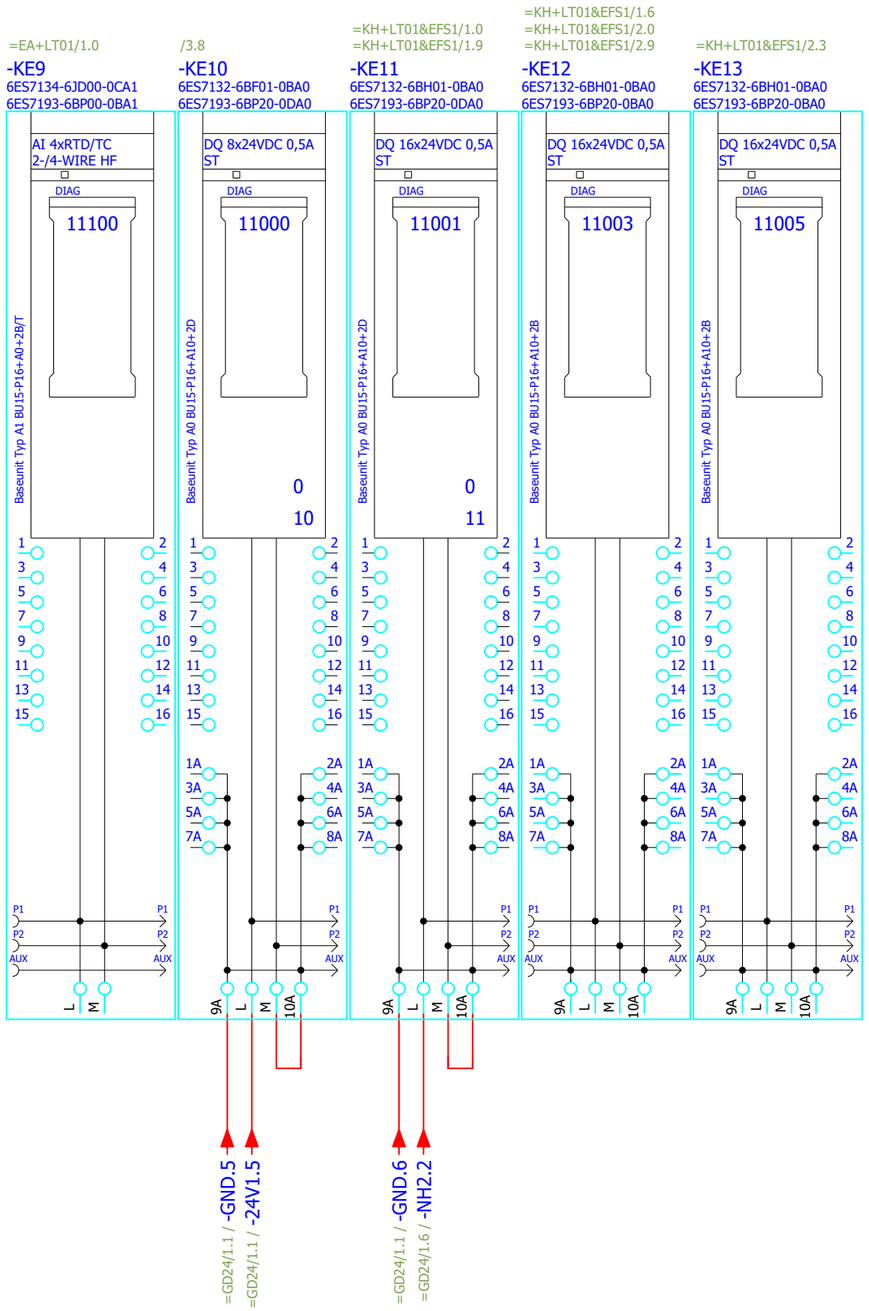

1 3

			Job name DAG_BR 449_IP_VAC+EDGE+ITG+WELD+PUNCH		Job number 1011002189	IEC	3CON Anlagenbau GmbH	PLC-ET200SP	==1005803	=PLC	&EFS
			BR 449_IP lower center cover+glove box_LHD_EDGE_TOOL_1+0_1+0		Drawing number 1005803	Version				PLC control	Wiring diagram
										+LT01.X01	Page 2
Modification	Date	Name	Creator AK Andreas Krischker	Approved by				last Editor AK Andreas Krischker	Date 03.09.2024	lower tool 1	Sheet 28 from 122

Reset web and application server

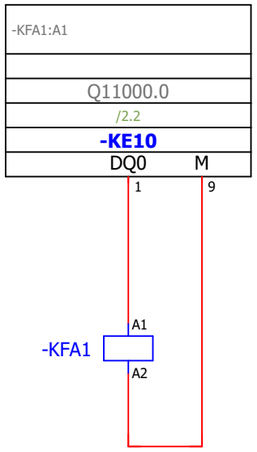

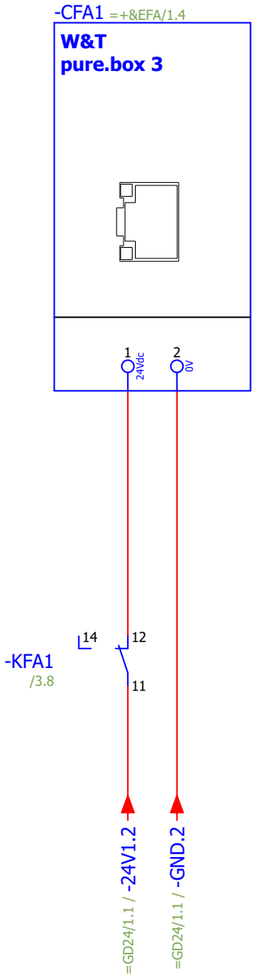

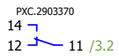

PLC diagram

IO-Test: _____ Date _____ Electrician _____ Programmer

DT: =PLC+UT01.X01-KE1

Placement: =PLC+UT01.X01&EFS/1.2
Type: ET 200SP DI 8x24VDC ST 6ES7131-6BF01-0BA0

IO-Test

Address	symbol name	Function text	/Page . path	
I11500.0 :1/DI0	==1005803=BA05+UT01-BGB1:4	Part detection UT 1.6.1	=BA05+UT01&EFS/1.0	
I11500.1 :2/DI1	==1005803=BA05+UT01-BGB2:4	Part detection UT 1.6.2	=BA05+UT01&EFS/1.1	
I11500.2 :3/DI2	==1005803=BA05+UT01-BGB3:4	Part detection UT 1.6.3	=BA05+UT01&EFS/1.2	
I11500.3 :4/DI3	==1005803=BA05+UT01-BGB4:4	Part detection UT 2.5.1	=BA05+UT01&EFS/1.3	
I11500.4 :5/DI4	==1005803=BA05+UT01-BGB5:4	Part detection UT 2.5.2	=BA05+UT01&EFS/1.4	
I11500.5 :6/DI5	I11500.5		=BA05+UT01&EFS/1.5	
I11500.6 :7/DI6	I11500.6		=BA05+UT01&EFS/1.6	
I11500.7 :8/DI7	I11500.7			

DT: =PLC+UT01.X01-KE2

Placement: =PLC+UT01.X01&EFS/1.2
Type: ET 200SP DI 8x24VDC ST 6ES7131-6BF01-0BA0

IO-Test

Address	symbol name	Function text	/Page . path	
I11501.0 :1/DI0	==1005803=MC01+UT01-BGB1:4	Heating stroke 1.1.1.1 HP	=MC01+UT01&EFS/1.0	
I11501.1 :2/DI1	==1005803=MC01+UT01-BGB2:4	Heating stroke 1.1.2.1 HP	=MC01+UT01&EFS/1.1	
I11501.2 :3/DI2	==1005803=MC01+UT01-BGB3:4	Heating stroke 1.1.3.1 HP	=MC01+UT01&EFS/1.2	
I11501.3 :4/DI3	==1005803=MC01+UT01-BGB4:4	Heating stroke 1.1.4.1 HP	=MC01+UT01&EFS/1.3	
I11501.4 :5/DI4	==1005803=MC01+UT01-BGB5:4	Heating stroke 2.1.1.1 HP	=MC01+UT01&EFS/1.4	
I11501.5 :6/DI5	==1005803=MC01+UT01-BGB6:4	Heating stroke 2.1.2.1 HP	=MC01+UT01&EFS/1.5	
I11501.6 :7/DI6	==1005803=MC01+UT01-BGB7:4	Heating stroke 2.1.3.1 HP	=MC01+UT01&EFS/1.6	
I11501.7 :8/DI7	==1005803=MC01+UT01-BGB8:4	Heating stroke 2.1.4.1 HP	=MC01+UT01&EFS/1.7	

DT: =PLC+UT01.X01-KE3

Placement: =PLC+UT01.X01&EFS/1.3
Type: ET 200SP DI 8x24VDC ST 6ES7131-6BF01-0BA0

IO-Test

Address	symbol name	Function text	/Page . path	
I11502.0 :1/DI0	==1005803=MC01+UT01-BGB9:4	Slider 1.3.1.1 HP	=MC01+UT01&EFS/2.0	
I11502.1 :2/DI1	==1005803=MC01+UT01-BGB10:4	Slider 1.3.2.1 HP	=MC01+UT01&EFS/2.1	
I11502.2 :3/DI2	I11502.2		=MC01+UT01&EFS/2.2	
I11502.3 :4/DI3	I11502.3		=MC01+UT01&EFS/2.3	
I11502.4 :5/DI4	I11502.4		=MC01+UT01&EFS/2.4	
I11502.5 :6/DI5	I11502.5		=MC01+UT01&EFS/2.5	
I11502.6 :7/DI6	I11502.6		=MC01+UT01&EFS/2.6	
I11502.7 :8/DI7	I11502.7		=MC01+UT01&EFS/2.7	

DT: =PLC+UT01.X01-KE4

Placement: =PLC+UT01.X01&EFS/1.4
Type: ET 200SP DI 8x24VDC ST 6ES7131-6BF01-0BA0

IO-Test

Address	symbol name	Function text	/Page . path	
I11503.0 :1/DI0	==1005803=ML06+UT01-BGB1:4	Gripper 1.2.1.1 HP	=ML06+UT01&EFS/1.0	
I11503.1 :2/DI1	==1005803=ML06+UT01-BGB2:4	Gripper 1.2.2.1 HP	=ML06+UT01&EFS/1.1	
I11503.2 :3/DI2	==1005803=ML06+UT01-BGB3:4	Gripper 1.2.3.1 HP	=ML06+UT01&EFS/1.2	
I11503.3 :4/DI3	==1005803=ML06+UT01-BGB4:4	Gripper 2.2.1.1 HP	=ML06+UT01&EFS/1.3	
I11503.4 :5/DI4	==1005803=ML06+UT01-BGB5:4	Gripper 2.2.2.1 HP	=ML06+UT01&EFS/1.4	
I11503.5 :6/DI5	I11503.5		=ML06+UT01&EFS/1.5	
I11503.6 :7/DI6	I11503.6		=ML06+UT01&EFS/1.6	
I11503.7 :8/DI7	I11503.7		=ML06+UT01&EFS/1.7	

DT: =PLC+UT01.X01-KE5

Placement: =PLC+UT01.X01&EFS/1.4
Type: ET 200SP DI 8x24VDC ST 6ES7131-6BF01-0BA0

IO-Test

Address	symbol name	Function text	/Page . path	
I11504.0 :1/DI0	==1005803=EC.01+UT01-EB1:Alarm:1	Alarm Heater One GB	=EC+UT01&EFS1/1.1	
I11504.1 :2/DI1	==1005803=EC.02+UT01-EB1:Alarm:1	Alarm Heater Two GB	=EC+UT01&EFS1/1.6	
I11504.2 :3/DI2	==1005803=EC.03+UT01-EB1:Alarm:1	Alarm Heater Three GB	=EC+UT01&EFS1/2.1	
I11504.3 :4/DI3	==1005803=EC.04+UT01-EB1:Alarm:1	Alarm Heater Four GB	=EC+UT01&EFS1/2.6	
I11504.4 :5/DI4	==1005803=EC.05+UT01-EB1:Alarm:1	Alarm Heater One IP	=EC+UT01&EFS1/3.1	
I11504.5 :6/DI5	==1005803=EC.06+UT01-EB1:Alarm:1	Alarm Heater Two IP	=EC+UT01&EFS1/3.6	
I11504.6 :7/DI6	==1005803=EC.07+UT01-EB1:Alarm:1	Alarm Heater Three IP	=EC+UT01&EFS1/4.1	
I11504.7 :8/DI7	==1005803=EC.08+UT01-EB1:Alarm:1	Alarm Heater Four IP	=EC+UT01&EFS1/4.6	

DT: =PLC+UT01.X01-KE6

Placement: =PLC+UT01.X01&EFS/2.1
Type: ET 200SP AI 4xRTD/TC 2-/4-WIRE HF 6ES7134-6JD00-0CA1

IO-Test

Address	symbol name	Function text	/Page . path	
IW11600 :1/M0+	==1005803=EA+UT01-BTA1:+	Nest temperature UT 1.5.1	=EA+UT01&EFS/1.0	
IW11602 :2/M1+	==1005803=EA+UT01-BTA2:+	Nest temperature UT 2.6.1	=EA+UT01&EFS/1.1	
IW11604 :3/M2+	==1005803=EA+UT01-BTA3:+	Slider temperature 1.3	=EA+UT01&EFS/1.2	
IW11606 :4/M3+	IW11606		=EA+UT01&EFS/1.3	

DT: =PLC+UT01.X01-KE7

Placement: =PLC+UT01.X01&EFS/2.2
Type: ET 200SP AI 4xRTD/TC 2-/4-WIRE HF 6ES7134-6JD00-0CA1

IO-Test

Address	symbol name	Function text	/Page . path	
IW11608 :1/M0+	==1005803=EC.01+UT01-BT1:b	Temperature sensor Heater 1.1.1.1	=EC+UT01&EFS1/1.3	
IW11610 :2/M1+	==1005803=EC.02+UT01-BT1:b	Temperature sensor Heater 1.1.2.1	=EC+UT01&EFS1/1.7	

PLC diagram

IO-Test: _____ Date _____ Electrician _____ Programmer

DT: =PLC+UT01.X01-KE7

Placement: =PLC+UT01.X01&EFS/2.2
Type: ET 200SP AI 4xRTD/TC 2-/4-WIRE HF 6ES7134-6JD00-0CA1

IO-Test

Address	symbol name	Function text	/Page . path
IW11612 :3/M2+	==1005803=EC.03+UT01-BT1:b	Temperature sensor Heater 1.1.3.1	=EC+UT01&EFS1/2.3
IW11614 :4/M3+	==1005803=EC.04+UT01-BT1:b	Temperature sensor Heater 1.1.4.1	=EC+UT01&EFS1/2.7

DT: =PLC+UT01.X01-KE8

Placement: =PLC+UT01.X01&EFS/2.2
Type: ET 200SP AI 4xRTD/TC 2-/4-WIRE HF 6ES7134-6JD00-0CA1

IO-Test

Address	symbol name	Function text	/Page . path
IW11616 :1/M0+	==1005803=EC.05+UT01-BT1:b	Temperature sensor Heater 2.1.1.1	=EC+UT01&EFS1/3.3
IW11618 :2/M1+	==1005803=EC.06+UT01-BT1:b	Temperature sensor Heater 2.1.2.1	=EC+UT01&EFS1/3.7
IW11620 :3/M2+	==1005803=EC.07+UT01-BT1:b	Temperature sensor Heater 2.1.3.1	=EC+UT01&EFS1/4.3
IW11622 :4/M3+	==1005803=EC.08+UT01-BT1:b	Temperature sensor Heater 2.1.4.1	=EC+UT01&EFS1/4.7

DT: =PLC+UT01.X01-KE9

Placement: =PLC+UT01.X01&EFS/2.3
Type: ET 200SP AQ 4xU/I ST 6ES7135-6HD00-0BA1

IO-Test

Address	symbol name	Function text	/Page . path
QW11624 :1/Q0+	==1005803=EC.01+UT01-EB1:Interface:2	Setpoint Heater One IP	=EC+UT01&EFS1/1.2
QW11626 :2/Q1+	==1005803=EC.02+UT01-EB1:Interface:2	Setpoint Heater Two IP	=EC+UT01&EFS1/1.6
QW11628 :3/Q2+	==1005803=EC.03+UT01-EB1:Interface:2	Setpoint Heater Three IP	=EC+UT01&EFS1/2.2
QW11630 :4/Q3+	==1005803=EC.04+UT01-EB1:Interface:2	Setpoint Heater Four IP	=EC+UT01&EFS1/2.6

DT: =PLC+UT01.X01-KE10

Placement: =PLC+UT01.X01&EFS/2.4
Type: ET 200SP AQ 4xU/I ST 6ES7135-6HD00-0BA1

IO-Test

Address	symbol name	Function text	/Page . path
QW11632 :1/Q0+	==1005803=EC.05+UT01-EB1:Interface:2	Setpoint Heater One GB	=EC+UT01&EFS1/3.2
QW11634 :2/Q1+	==1005803=EC.06+UT01-EB1:Interface:2	Setpoint Heater Two GB	=EC+UT01&EFS1/3.6
QW11636 :3/Q2+	==1005803=EC.07+UT01-EB1:Interface:2	Setpoint Heater Three GB	=EC+UT01&EFS1/4.2
QW11638 :4/Q3+	==1005803=EC.08+UT01-EB1:Interface:2	Setpoint Heater Four GB	=EC+UT01&EFS1/4.6

DT: =PLC+UT01.X01-KE11

Placement: =PLC+UT01.X01&EFS/2.4
Type: ET 200SP DQ 8x24VDC 0,5A ST 6ES7132-6BF01-0BA0

IO-Test

Address	symbol name	Function text	/Page . path
Q11500.0 :1/DQ0	==1005803=ML06+UT01-KHB1:14:+	Gripper 1.2 WP	=ML06+UT01&EFS/2.0
Q11500.1 :2/DQ1	==1005803=ML06+UT01-KHB1:12:+	Gripper 1.2 HP	=ML06+UT01&EFS/2.1

DT: =PLC+UT01.X01-KE11

Placement: =PLC+UT01.X01&EFS/2.4
Type: ET 200SP DQ 8x24VDC 0,5A ST 6ES7132-6BF01-0BA0

IO-Test

Address	symbol name	Function text	/Page . path
Q11500.2 :3/DQ2	==1005803=ML06+UT01-KHB2:14:+	Gripper 2.2 WP	=ML06+UT01&EFS/2.2
Q11500.3 :4/DQ3	==1005803=ML06+UT01-KHB2:12:+	Gripper 2.2 HP	=ML06+UT01&EFS/2.3
Q11500.4 :5/DQ4	Q11500.4		
Q11500.5 :6/DQ5	Q11500.5		
Q11500.6 :7/DQ6	Q11500.6		
Q11500.7 :8/DQ7	Q11500.7		

DT: =PLC+UT01.X01-KE12

Placement: =PLC+UT01.X01&EFS/2.5
Type: ET 200SP DQ 8x24VDC 0,5A ST 6ES7132-6BF01-0BA0

IO-Test

Address	symbol name	Function text	/Page . path
Q11501.0 :1/DQ0	==1005803=MC01+UT01-KHB1:14:+	Heating stroke 1.1 WP	=MC01+UT01&EFS/3.0
Q11501.1 :2/DQ1	==1005803=MC01+UT01-KHB1:12:+	Heating stroke 1.1 HP	=MC01+UT01&EFS/3.1
Q11501.2 :3/DQ2	==1005803=MC01+UT01-KHB2:14:+	Heating stroke 2.1 WP	=MC01+UT01&EFS/3.2
Q11501.3 :4/DQ3	==1005803=MC01+UT01-KHB2:12:+	Heating stroke 2.1 HP	=MC01+UT01&EFS/3.3
Q11501.4 :5/DQ4	==1005803=MC01+UT01-KHB3:14:+	Slider 1.3 WP	=MC01+UT01&EFS/3.4
Q11501.5 :6/DQ5	==1005803=MC01+UT01-KHB3:12:+	Slider 1.3 HP	=MC01+UT01&EFS/3.5
Q11501.6 :7/DQ6	Q11501.6		
Q11501.7 :8/DQ7	Q11501.7		

PLC card overview

3CON Anlagenbau GmbH
Kleinfeld 16
A-6341 Ebbs

[3CON]_F20_002-V2

Device tag PLC	Workstation name Workstation type	Start address IN	Start address OUT	Rack	Module	CPU
-KE1	ET200SP_Station_UT1 ET200SP	11500		0	1	TIA100XXXX.S7_CPU.1
-KE2	ET200SP	11501		0	2	TIA100XXXX.S7_CPU.1
-KE3	ET200SP	11502		0	3	TIA100XXXX.S7_CPU.1
-KE4	ET200SP	11503		0	4	TIA100XXXX.S7_CPU.1
-KE5	ET200SP	11504		0	5	TIA100XXXX.S7_CPU.1
-KE6	ET200SP	11600		0	6	TIA100XXXX.S7_CPU.1
-KE7	ET200SP	11608		0	7	TIA100XXXX.S7_CPU.1
-KE8	ET200SP	11616		0	8	TIA100XXXX.S7_CPU.1
-KE9	ET200SP	11624		0	9	TIA100XXXX.S7_CPU.1
-KE10	ET200SP	11632		0	10	TIA100XXXX.S7_CPU.1
-KE11	ET200SP	11500		0	11	TIA100XXXX.S7_CPU.1
-KE12	ET200SP	11501		0	12	TIA100XXXX.S7_CPU.1

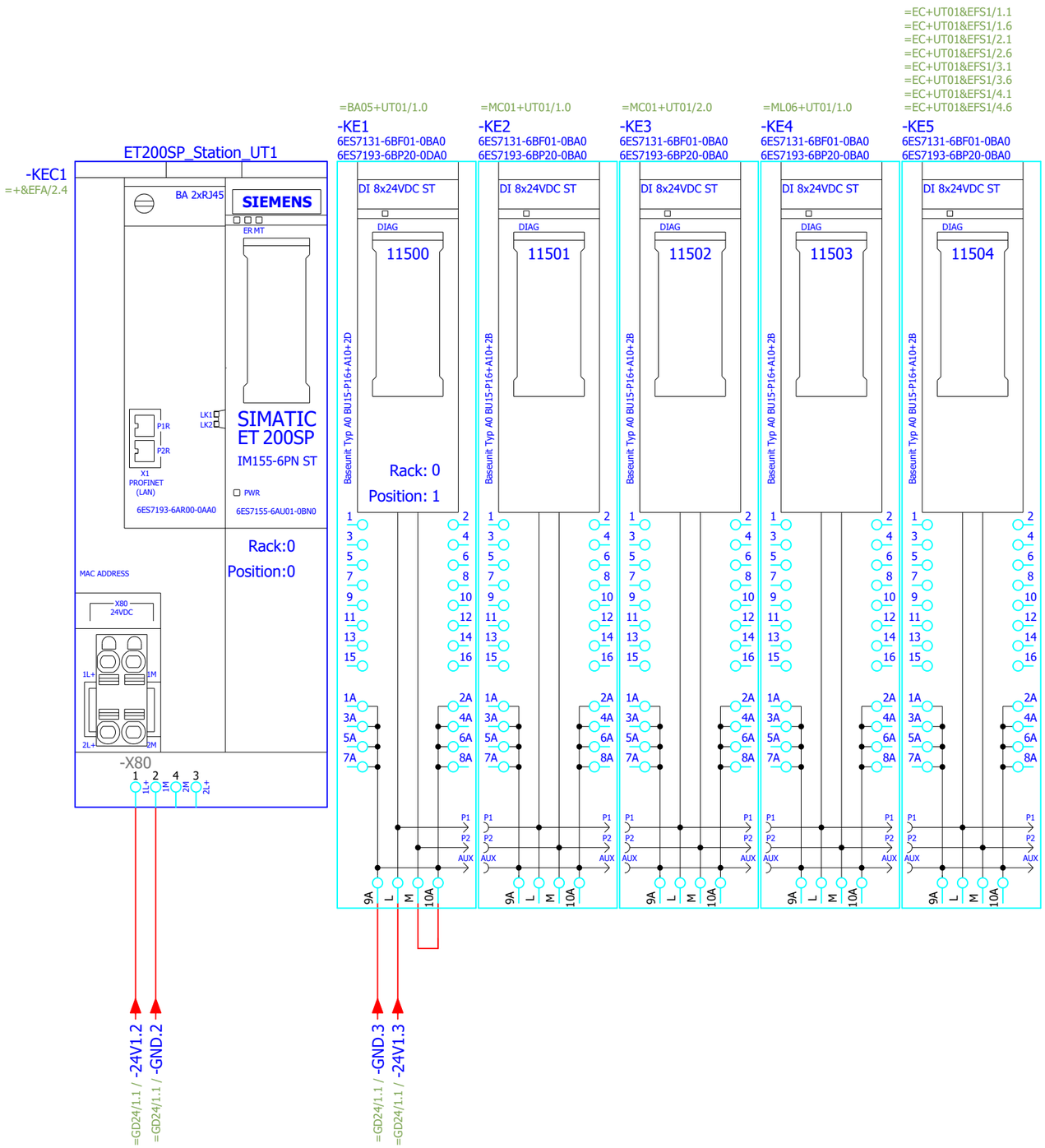

&EFA3/1

2

			Job name DAG_BR 449_IP_VAC+EDGE+ITG+WELD+PUNCH	Job number 1011002189	IEC	3CON Anlagenbau GmbH	PLC-ET200SP	==1005803	=PLC	&EFS
			BR 449_IP lower center cover+glove box_LHD_EDGE_TOOL_1+0_1+0	Drawing number 1005803	Version				PLC control	Wiring diagram
									+UT01.X01	Page 1
Modification	Date	Name	Creator AK Andreas Krischker	Approved by			last Editor AK Andreas Krischker	Date 03.09.2024	Upper tool 1	Sheet 33 from 122

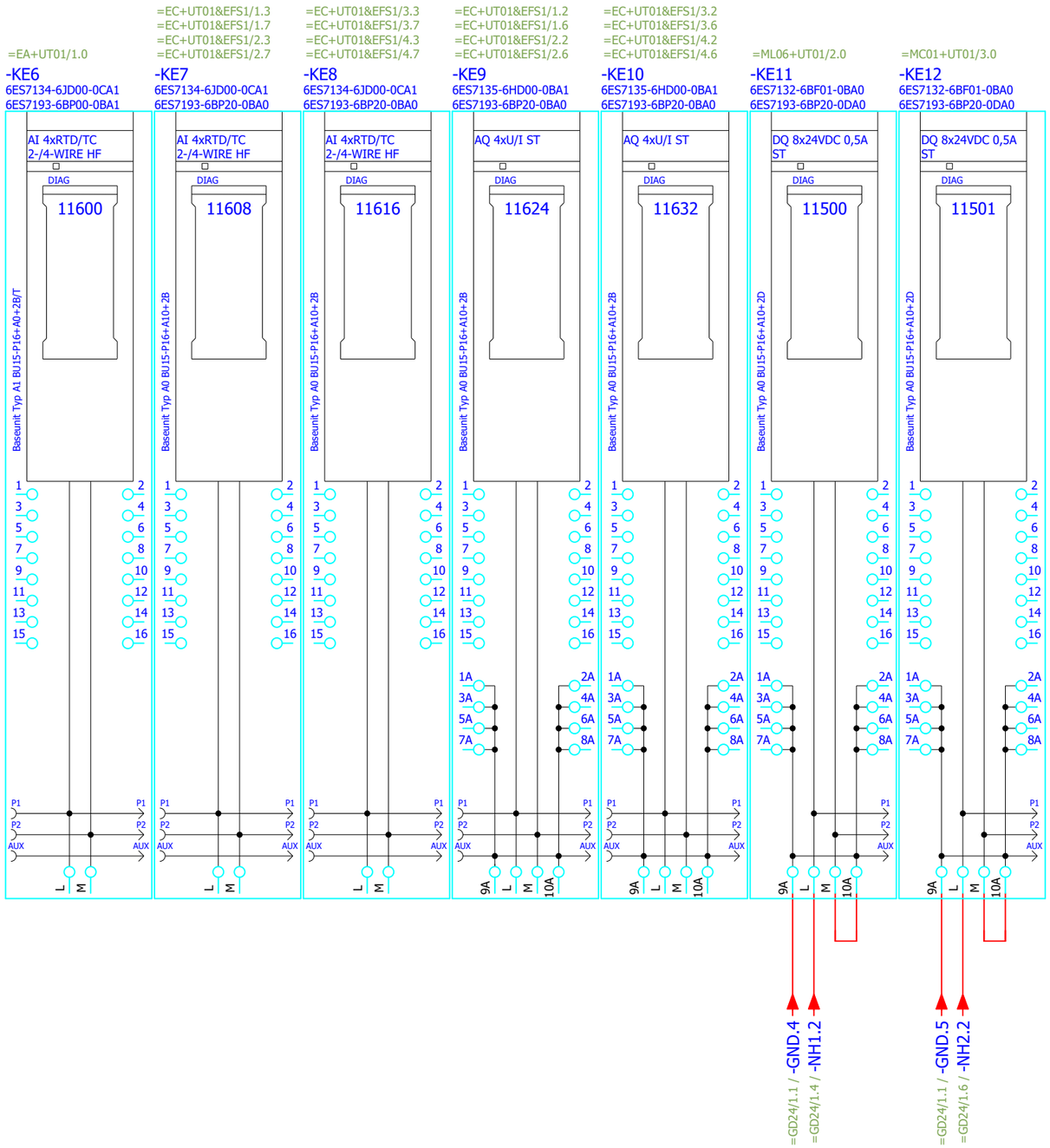

1

=XS+LT01/1

			Job name DAG_BR 449_IP_VAC+EDGE+ITG+WELD+PUNCH	Job number 1011002189	IEC	3CON Anlagenbau GmbH	PLC-ET200SP	==1005803	=PLC	&EFS
			BR 449_IP lower center cover+glove box_LHD_EDGE_TOOL_1+0_1+0	Drawing number 1005803	Version				PLC control	Wiring diagram
									+UT01.X01	Page 2
Modification	Date	Name	Creator AK Andreas Krischker	Approved by			last Editor AK Andreas Krischker	Date 03.09.2024	Upper tool 1	Sheet 34 from 122

Machine

-XS1

-XS1
=+&EFA/1.1

TOOL Plug 1:

-XS1 =

=+&EFA/1.1
=GD24+.X01/1.3
=GE/1.1

Machine

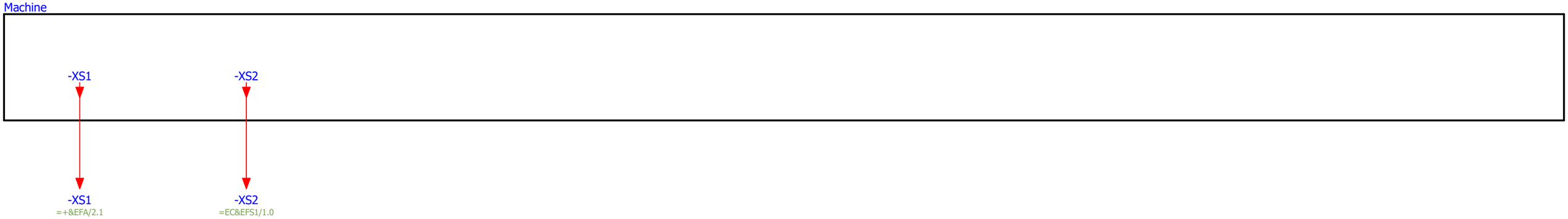

TOOL Plug 1:

-XS1 =

=GD24+.X01/1.3
=GE/1.1
=+&EFA/2.1

TOOL Plug 2:

-XS2 =

=EC&EFS1/1.0
=EC&EFS1/2.0
=EC&EFS1/3.0
=EC&EFS1/4.0

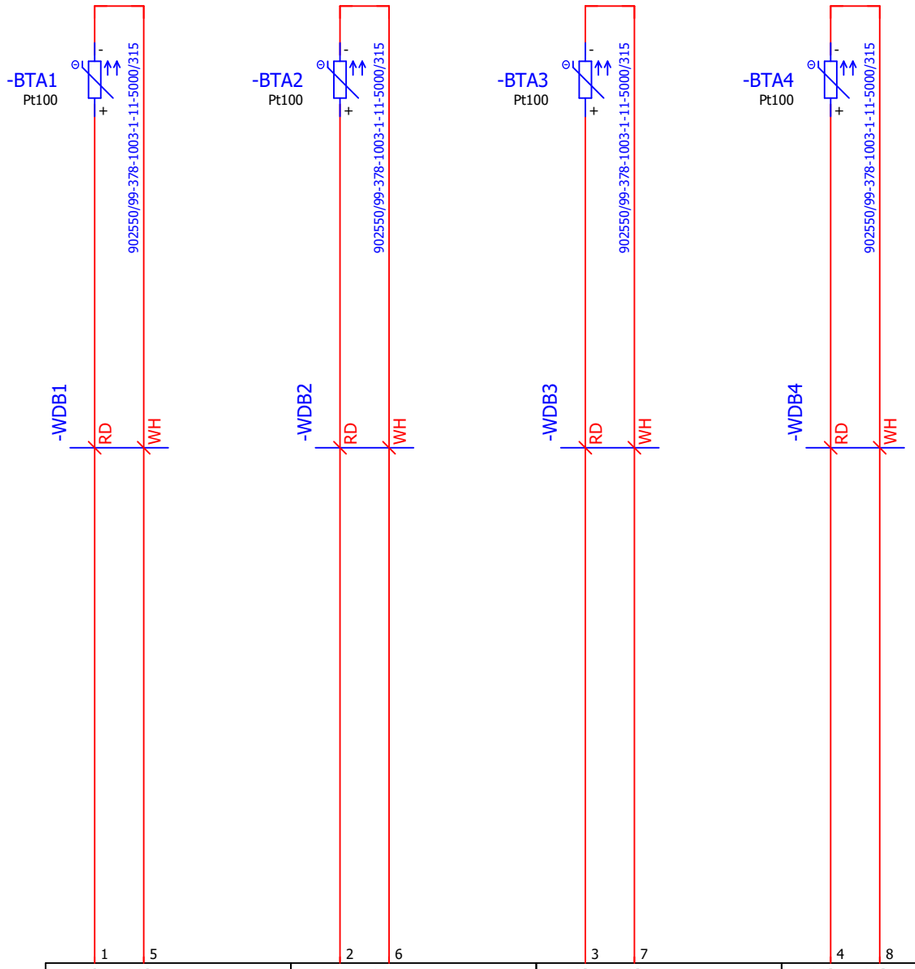

M0+ M0-	M1+ M1-	M2+ M2-	M3+ M3-
-KE9	**-KE9**	**-KE9**	**-KE9**
=PLC+.X01/2.1			
IW11100	IW11102	IW11104	IW11106
-BTA1:+	-BTA2:+	-BTA3:+	-BTA4:+

Nest temperature LT 1.3.1

Sliders temperature 1.4.1

Nest temperature LT 2.2.1

Sliders temperature 2.3.1

=XS+UT01/1

+UT01/1

			Job name DAG_BR 449_IP_VAC+EDGE+ITG+WELD+PUNCH		Job number 1011002189	IEC	3CON Anlagenbau GmbH	Temperature queries temperature control circuits	==1005803	=EA	&EFS
			BR 449_IP lower center cover+glove box_LHD_EDGE_TOOL_1+0_1+0							process water	Wiring diagram
					Drawing number 1005803	Version				+LT01	Page 1
Modification	Date	Name	Creator AK Andreas Krischker	Approved by				last Editor AK Andreas Krischker	Date 03.09.2024	lower tool 1	Sheet 37 from 122

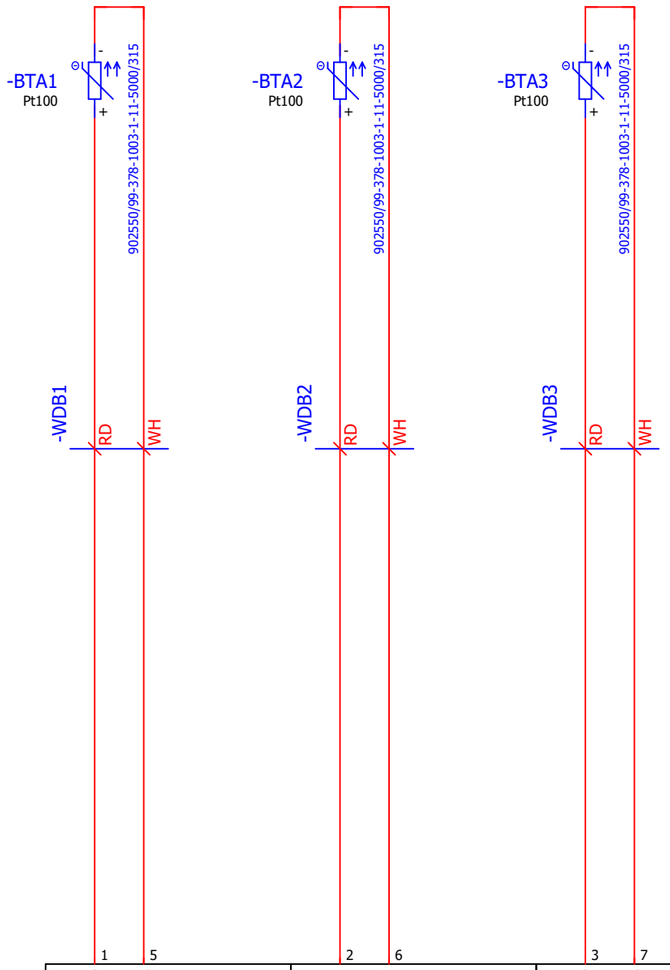

M0+ M0-	M1+ M1-	M2+ M2-	M3+ M3-
-KE6	**-KE6**	**-KE6**	**-KE6**
=PLC+.X01/2.1			
IW11600	IW11602	IW11604	IW11606
-BTA1:+	-BTA2:+	-BTA3:+	IW11606

Nest temperature UT 1.5.1

Nest temperature UT 2.6.1

Slider temperature 1.3

+LT01/1

=EC&EFS1/1

			Job name DAG_BR 449_IP_VAC+EDGE+ITG+WELD+PUNCH		Job number 1011002189	IEC	3CON Anlagenbau GmbH	Temperature queries temperature control circuits	==1005803	=EA	&EFS
			BR 449_IP lower center cover+glove box_LHD_EDGE_TOOL_1+0_1+0							process water	Wiring diagram
					Drawing number 1005803	Version				+UT01	Page 1
Modification	Date	Name	Creator AK Andreas Krischker	Approved by				last Editor AK Andreas Krischker	Date 29.11.2024	Upper tool 1	Sheet 38 from 122

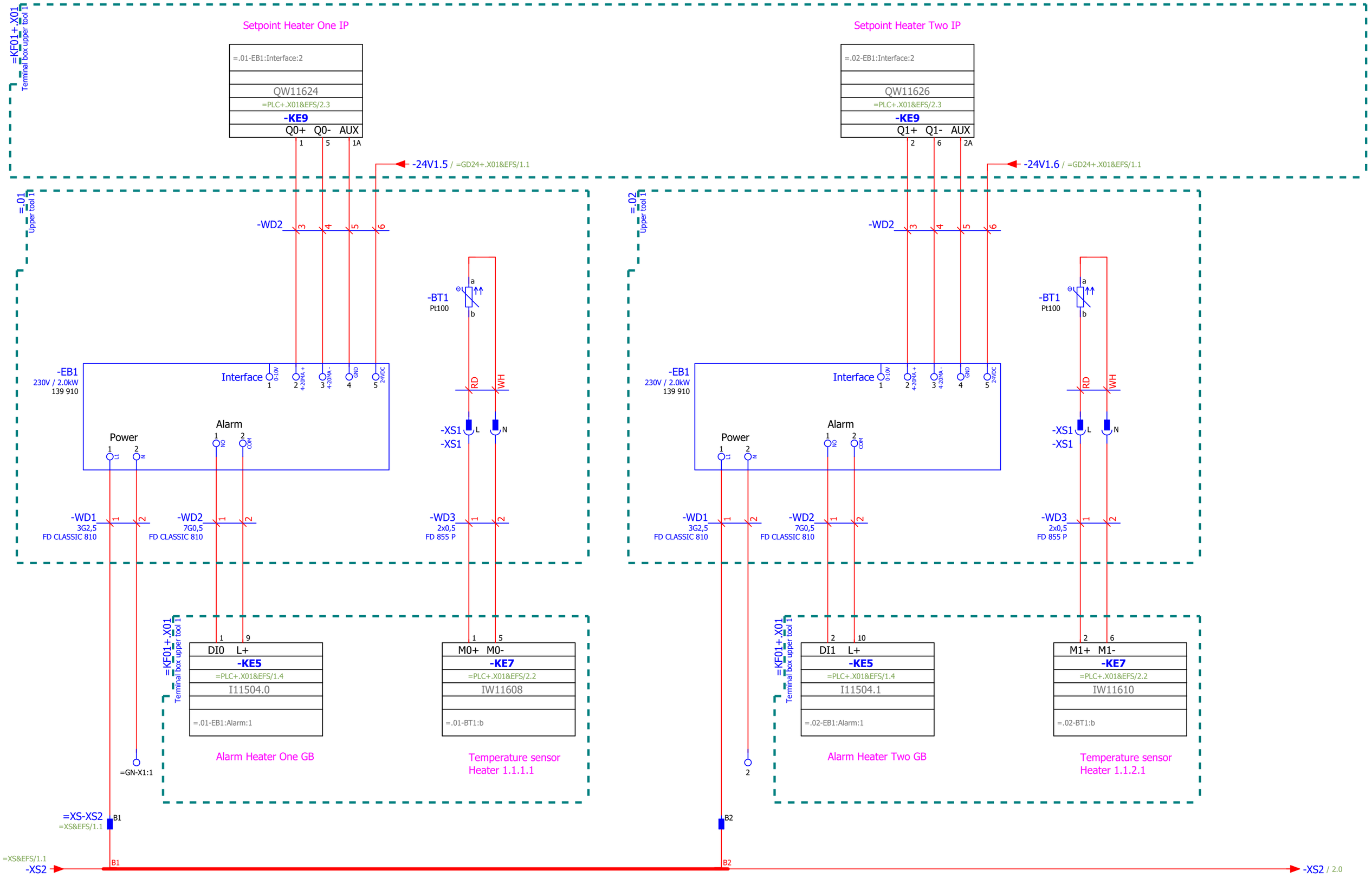

=EA&EFS/1

2

			Job name DAG_BR 449_IP_VAC+EDGE+ITG+WELD+PUNCH		Job number 1011002189	IEC	3CON Anlagenbau GmbH	Heating	==1005803	=EC	&EFS1
			BR 449_IP lower center cover+glove box_LHD_EDGE_TOOL_1+0_1+0		Drawing number 1005803	Version				Heating system AH	Electrical engineering schematic
										+UT01	Page 1
Modification	Date	Name	Creator AK Andreas Krischker	Approved by				last Editor AK Andreas Krischker	Date 30.10.2024	Upper tool 1	Sheet 39 from 122

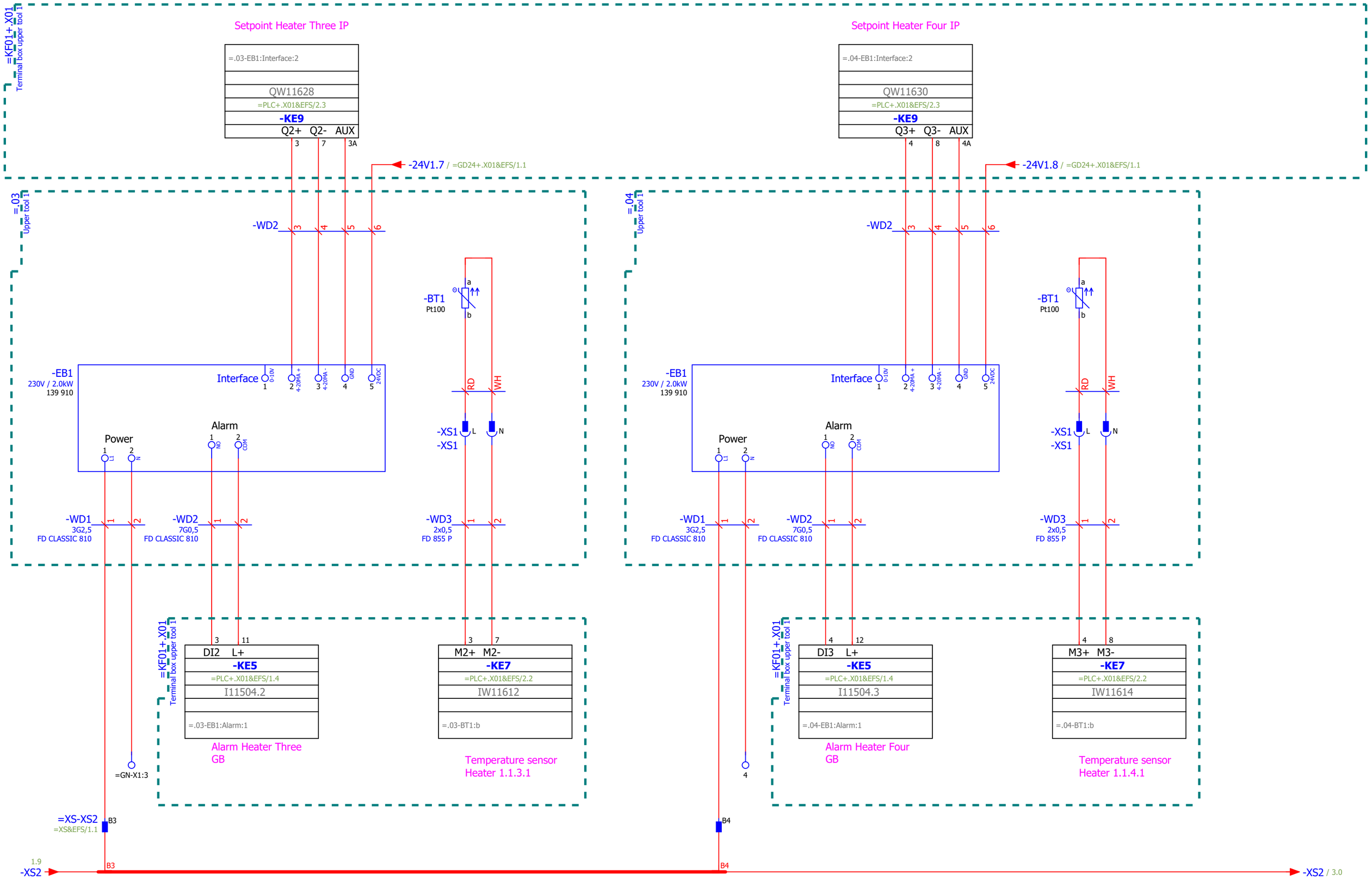

			Job name DAG_BR 449_IP_VAC+EDGE+ITG+WELD+PUNCH	Job number 1011002189	IEC	3CON Anlagenbau GmbH	Heating	==1005803	=EC	&EFS1
			BR 449_IP lower center cover+glove box_LHD_EDGE_TOOL_1+0_1+0	Drawing number 1005803	Version				Heating system AH	Electrical engineering schematic
									+UT01	Page 2
Modification	Date	Name	Creator AK Andreas Krischker	Approved by			last Editor AK Andreas Krischker	Date 30.10.2024	Upper tool 1	Sheet 40 from 122

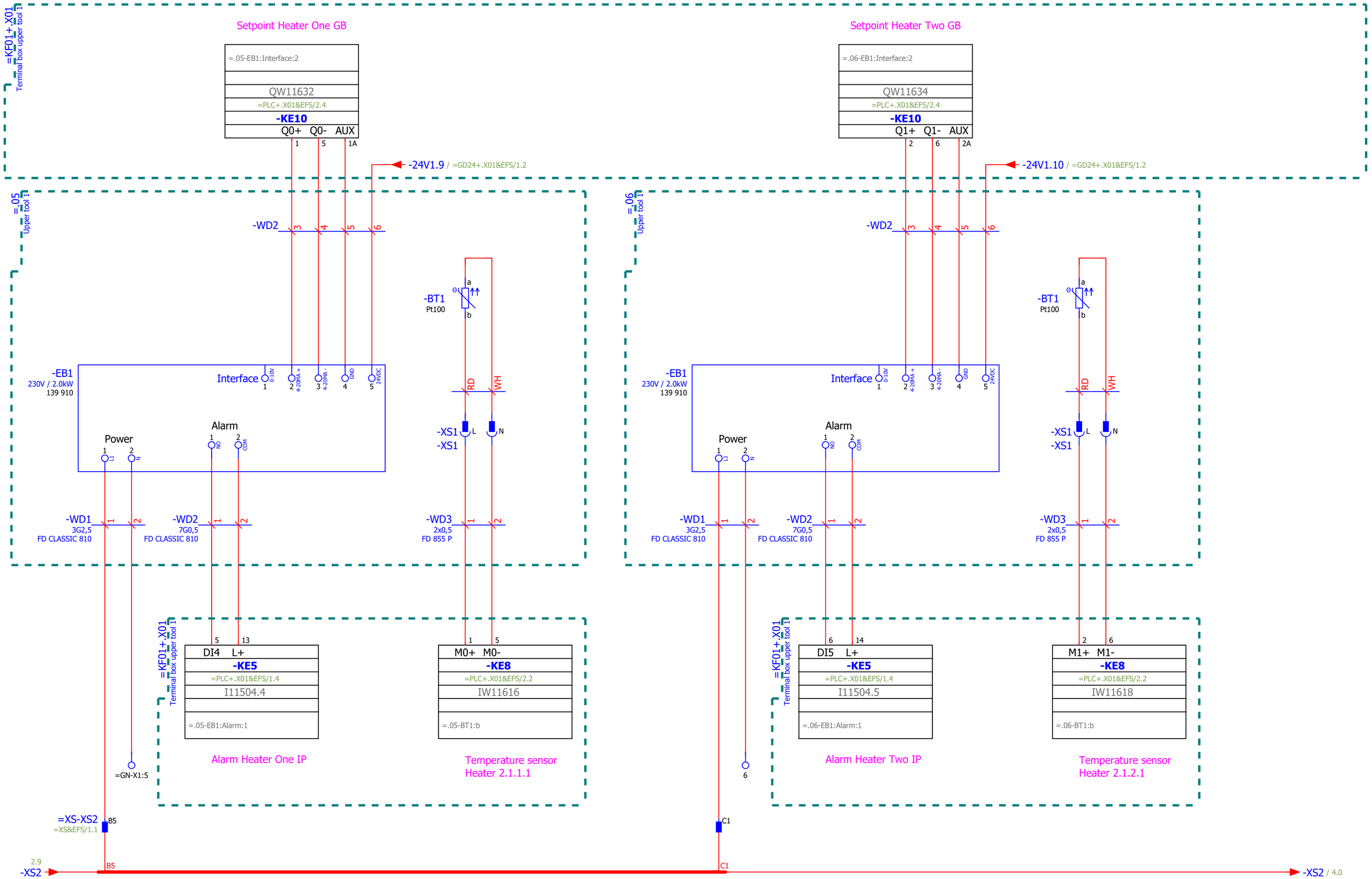

2 4

			Job name DAG_BR 449_IP_VAC+EDGE+ITG+WELD+PUNCH	Job number 1011002189	IEC	3CON Anlagenbau GmbH	Heating	==1005803	=EC	&EFS1
			BR 449_IP lower center cover+glove box_LHD_EDGE_TOOL_1+0_1+0	Drawing number 1005803	Version				Heating system AH	Electrical engineering schematic
									+UT01	Page 3
Modification	Date	Name	Creator AK Andreas Krischker	Approved by			last Editor AK Andreas Krischker	Date 30.10.2024	Upper tool 1	Sheet 41 from 122

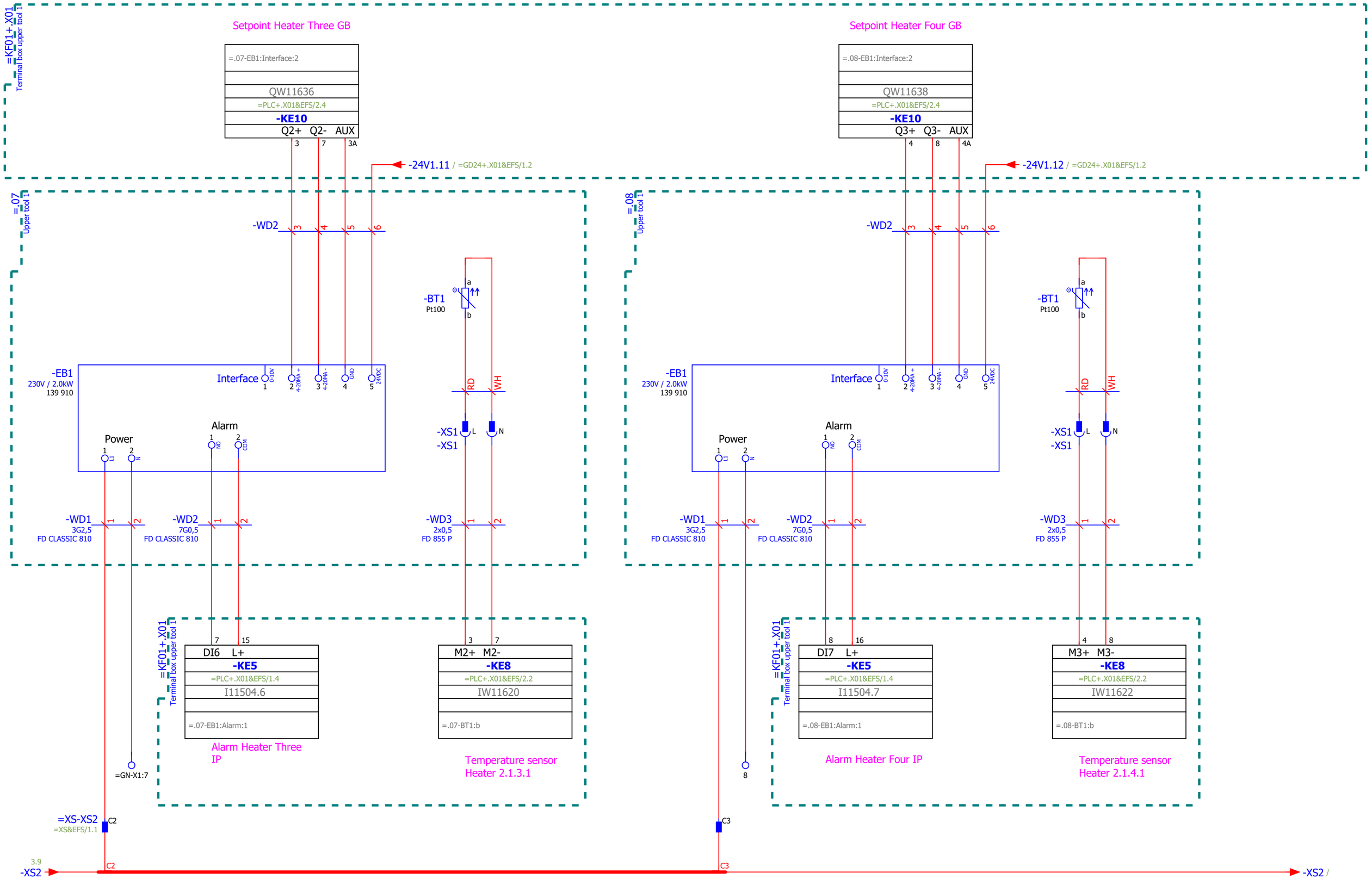

=KH+LT01/1

			Job name DAG_BR 449_IP_VAC+EDGE+ITG+WELD+PUNCH	Job number 1011002189	IEC	3CON Anlagenbau GmbH	Heating		==1005803	=EC	&EFS1
			BR 449_IP lower center cover+glove box_LHD_EDGE_TOOL_1+0_1+0	Drawing number 1005803	Version					Heating system AH	Electrical engineering schematic
										+UT01	Page 4
Modification	Date	Name	Creator AK Andreas Krischker	Approved by			last Editor AK Andreas Krischker	Date 30.10.2024		Upper tool 1	Sheet 42 from 122

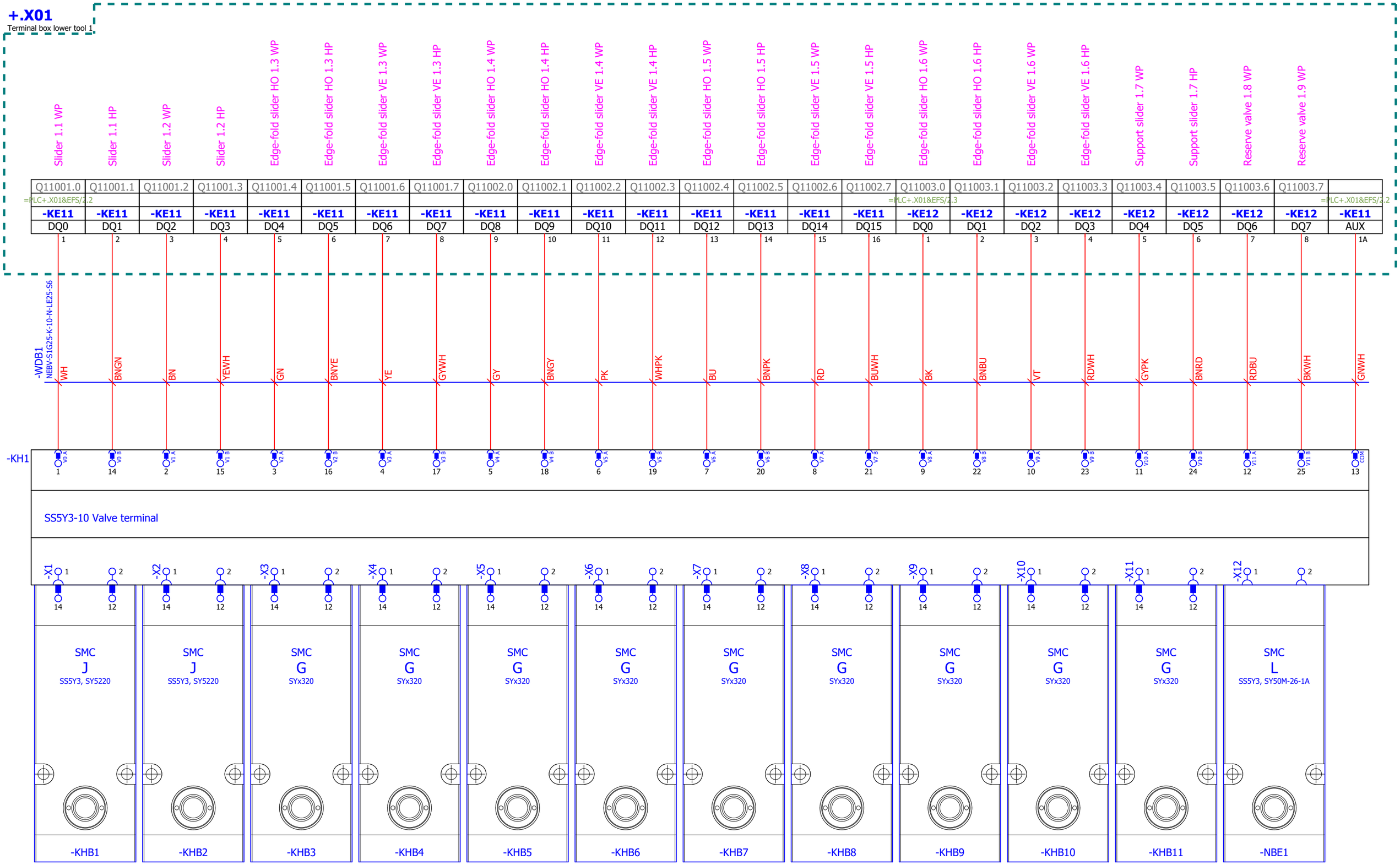

=EC+UT01/4

2

			Job name DAG_BR 449_IP_VAC+EDGE+ITG+WELD+PUNCH	Job number 1011002189	IEC	3CON Anlagenbau GmbH	Valve terminal SMC 1	==1005803	=KH	&EFS1
			BR 449_IP lower center cover+glove box_LHD_EDGE_TOOL_1+0_1+0	Drawing number 1005803	Version				Fluidic signal object	Electrical engineering schematic
									+LT01	Page 1
Modification	Date	Name	Creator AK Andreas Krischker	Approved by			last Editor AK Andreas Krischker	Date 22.10.2024	lower tool 1	Sheet 43 from 122

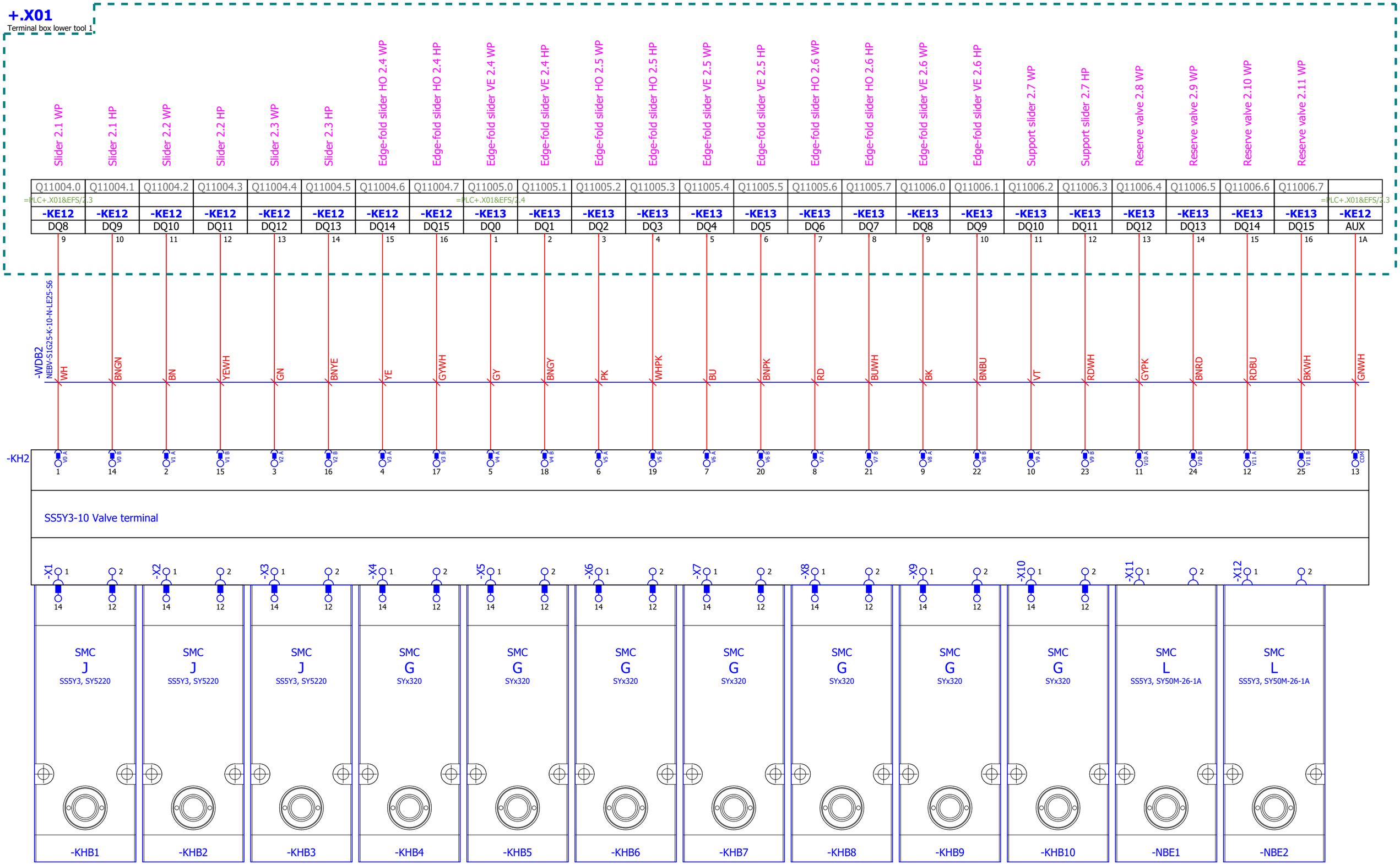

1

=BA05&EFS/1

			Job name DAG_BR 449_IP_VAC+EDGE+ITG+WELD+PUNCH	Job number 1011002189	IEC	3CON Anlagenbau GmbH	Valve terminal SMC 2	==1005803	=KH	&EFS1
			BR 449_IP lower center cover+glove box_LHD_EDGE_TOOL_1+0_1+0	Drawing number 1005803	Version				Fluidic signal object	Electrical engineering schematic
									+LT01	Page 2
Modification	Date	Name	Creator AK Andreas Krischker	Approved by			last Editor AK Andreas Krischker	Date 17.09.2024	lower tool 1	Sheet 44 from 122

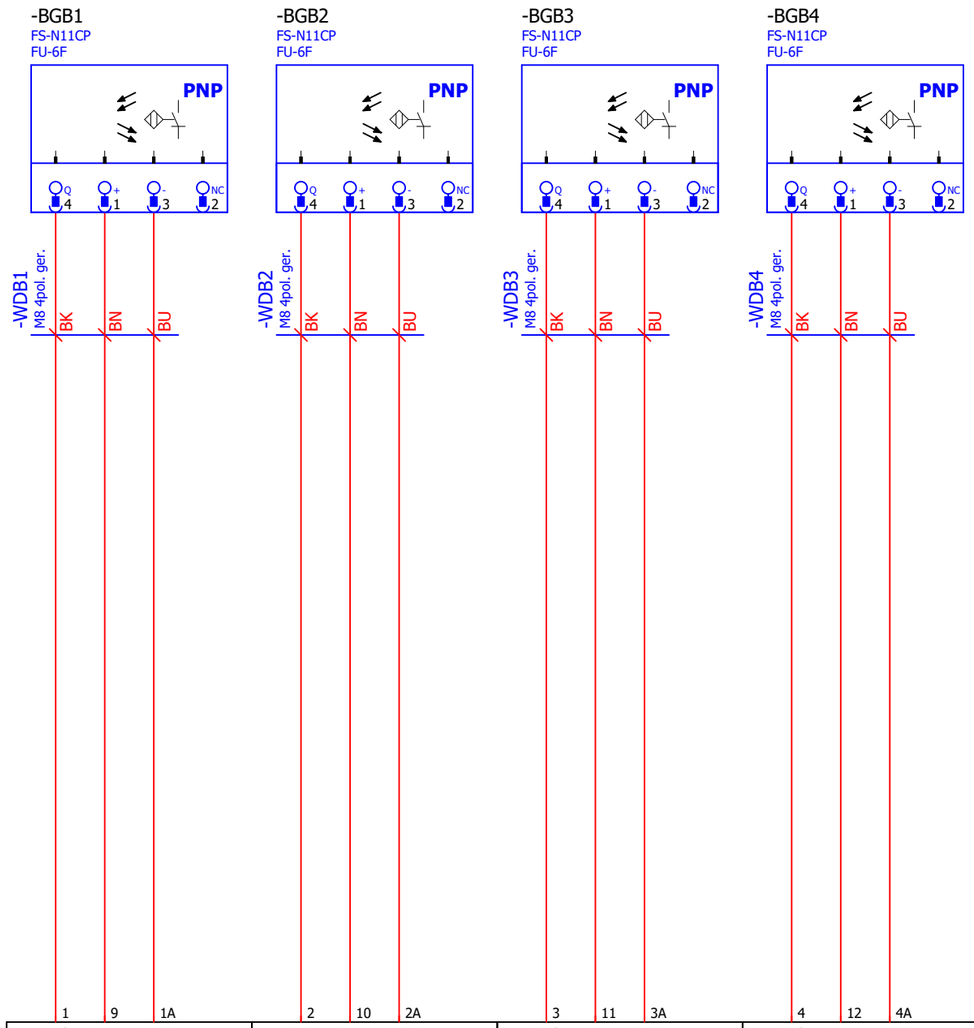

DI0 L+ AUX	DI1 L+ AUX	DI2 L+ AUX	DI3 L+ AUX	DI4 L+ AUX	DI5 L+ AUX	DI6 L+ AUX	DI7 L+ AUX
-KE1	**-KE1**	**-KE1**	**-KE1**	**-KE1**	**-KE1**	**-KE1**	**-KE1**
=PLC+.X01/1.2							
I11000.0	I11000.1	I11000.2	I11000.3	I11000.4	I11000.5	I11000.6	I11000.7
-BGB1:4	-BGB2:4	-BGB3:4	-BGB4:4	I11000.4	I11000.5	I11000.6	I11000.7

Part detection 1.2.1 Part detection 1.2.2 Part detection 2.4.1 Part detection 2.4.2

=KH&EFS1/2

+UT01/1

			Job name DAG_BR 449_IP_VAC+EDGE+ITG+WELD+PUNCH		Job number 1011002189	IEC	3CON Anlagenbau GmbH	Queries	==1005803	=BA05	&EFS
			BR 449_IP lower center cover+glove box_LHD_EDGE_TOOL_1+0_1+0		Drawing number 1005803	Version				Component-recognition	Wiring diagram
										+LT01	Page 1
Modification	Date	Name	Creator AK Andreas Krischker	Approved by				last Editor AK Andreas Krischker	Date 30.10.2024	lower tool 1	Sheet 45 from 122

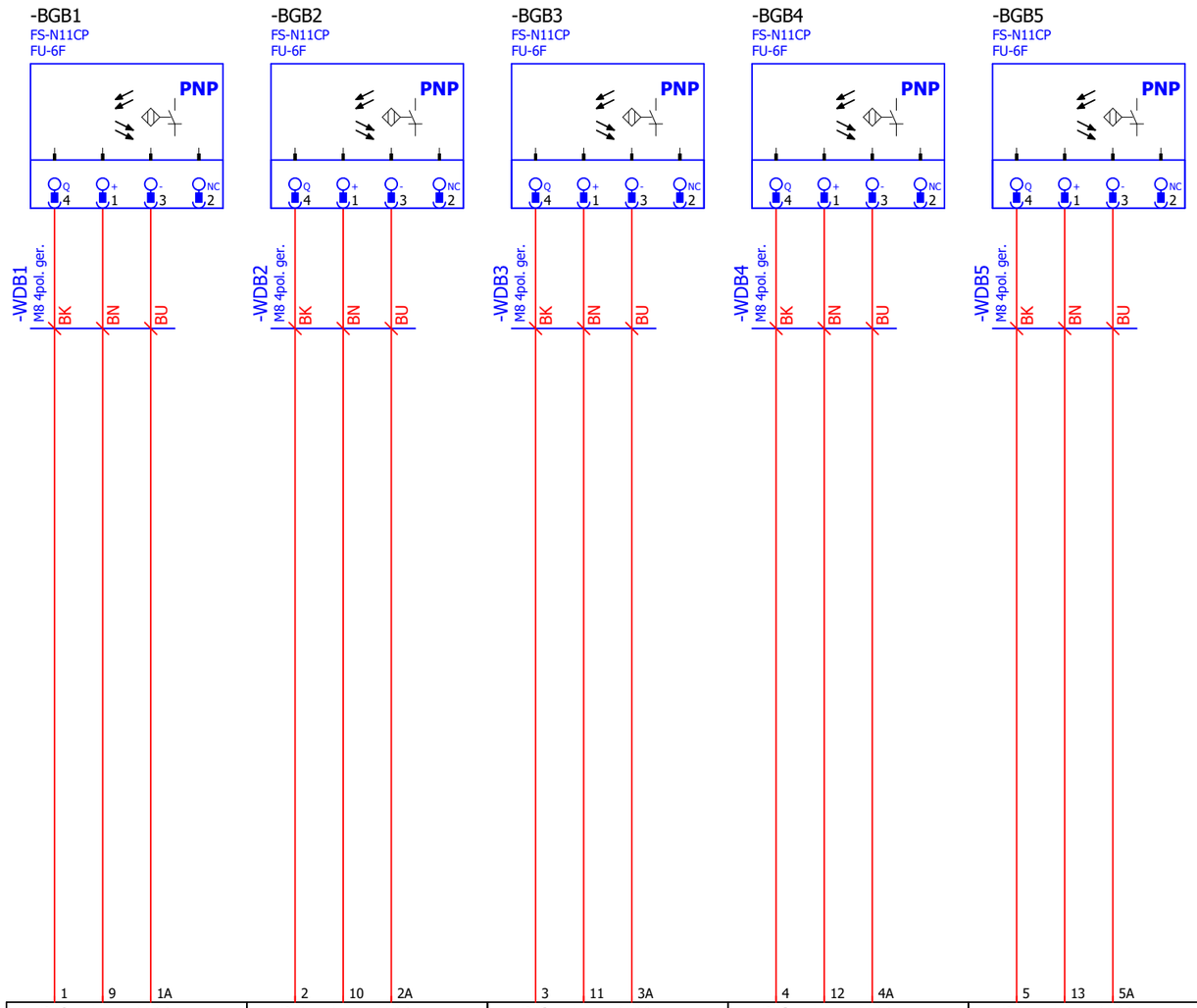

DI0 L+ AUX	DI1 L+ AUX	DI2 L+ AUX	DI3 L+ AUX	DI4 L+ AUX	DI5 L+ AUX	DI6 L+ AUX
-KE1	**-KE1**	**-KE1**	**-KE1**	**-KE1**	**-KE1**	**-KE1**
=PLC+.X01/1.2						
I11500.0	I11500.1	I11500.2	I11500.3	I11500.4	I11500.5	I11500.6
-BGB1:4	-BGB2:4	-BGB3:4	-BGB4:4	-BGB5:4	I11500.5	I11500.6

Part detection UT
1.6.1

Part detection UT
1.6.2

Part detection UT
1.6.3

Part detection UT
2.5.1

Part detection UT
2.5.2

+LT01/1

=MC01+LT01/1

			Job name DAG_BR 449_IP_VAC+EDGE+ITG+WELD+PUNCH		Job number 1011002189	IEC	3CON Anlagenbau GmbH	Queries	==1005803	=BA05	&EFS
			BR 449_IP lower center cover+glove box_LHD_EDGE_TOOL_1+0_1+0		Drawing number 1005803	Version				Component-recognition	Wiring diagram
										+UT01	Page 1
Modification	Date	Name	Creator AK Andreas Krischker	Approved by				last Editor AK Andreas Krischker	Date 17.09.2024	Upper tool 1	Sheet 46 from 122

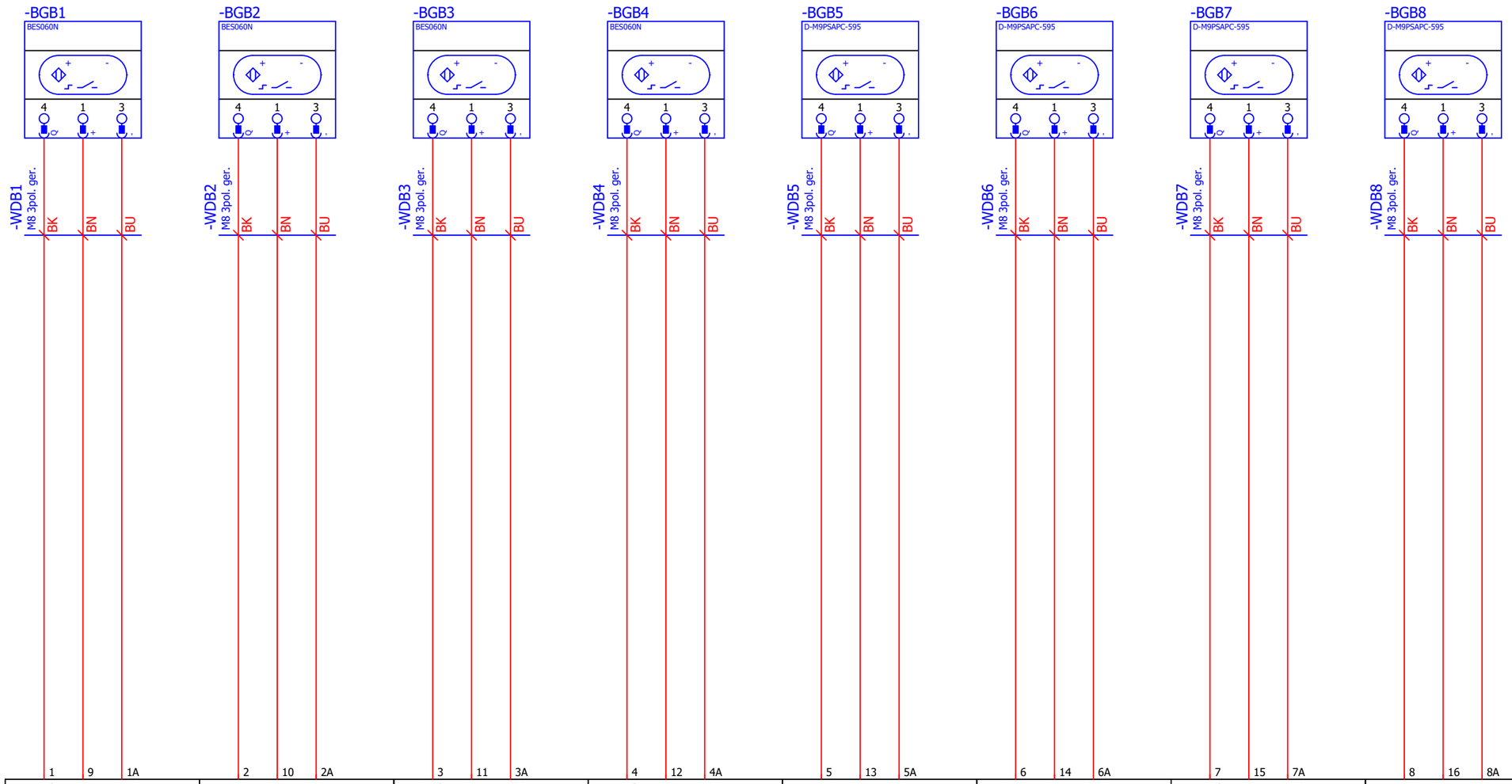

DI0 L+ AUX	DI1 L+ AUX	DI2 L+ AUX	DI3 L+ AUX	DI4 L+ AUX	DI5 L+ AUX	DI6 L+ AUX	DI7 L+ AUX
-KE2	**-KE2**	**-KE2**	**-KE2**	**-KE2**	**-KE2**	**-KE2**	**-KE2**
=PLC+.X01/1.2							
I11001.0	I11001.1	I11001.2	I11001.3	I11001.4	I11001.5	I11001.6	I11001.7
-BGB1:4	-BGB2:4	-BGB3:4	-BGB4:4	-BGB5:4	-BGB6:4	-BGB7:4	-BGB8:4

Slider 1.1.1.1 HP | Slider 1.1.2.1 HP | Slider 1.2.1.1 HP | Support slider 1.7.1.1 HP | Slider 2.1.1.1 HP | Slider 2.1.2.1 HP | Slider 2.2.1.1 HP | Slider 2.3.1.1 HP

=BA05+UT01/1

2

			Job name DAG_BR 449_IP_VAC+EDGE+ITG+WELD+PUNCH	Job number 1011002189	IEC	3CON Anlagenbau GmbH	Queries	==1005803	=MC01	&EFS
			BR 449_IP lower center cover+glove box_LHD_EDGE_TOOL_1+0_1+0						Slider	Wiring diagram
				Drawing number 1005803	Version				+LT01	Page 1
Modification	Date	Name	Creator AK Andreas Krischker	Approved by			last Editor AK Andreas Krischker	Date 16.10.2024	lower tool 1	Sheet 47 from 122

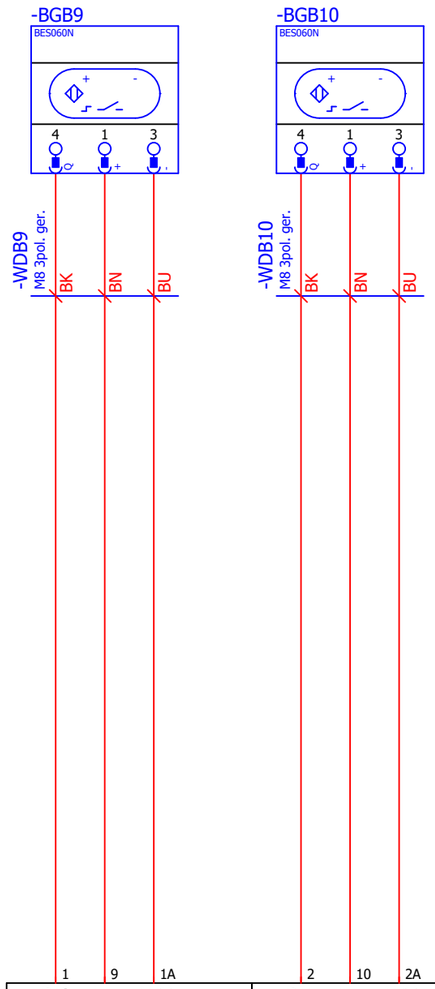

1	9	1A	2	10	2A	3	11	3A	4	12	4A	5	13	5A	6	14	6A	7	15	7A	8	16	8A
DI0	L+	AUX	DI1	L+	AUX	DI2	L+	AUX	DI3	L+	AUX	DI4	L+	AUX	DI5	L+	AUX	DI6	L+	AUX	DI7	L+	AUX
-KE3			-KE3			-KE3			-KE3			-KE3			-KE3			-KE3			-KE3		
=PLC+.X01/1.3																							
I11002.0			I11002.1			I11002.2			I11002.3			I11002.4			I11002.5			I11002.6			I11002.7		
-BGB9:4			-BGB10:4			I11002.2			I11002.3			I11002.4			I11002.5			I11002.6			I11002.7		

Support slider 2.7.1.1
HP

Support slider 1.7.2.1
HP

1

+UT01/1

			Job name DAG_BR 449_IP_VAC+EDGE+ITG+WELD+PUNCH		Job number 1011002189	IEC	3CON Anlagenbau GmbH	Queries		==1005803	=MC01	&EFS	
			BR 449_IP lower center cover+glove box_LHD_EDGE_TOOL_1+0_1+0								Slider	Wiring diagram	
					Drawing number 1005803	Version					+LT01	Page	2
Modification	Date	Name	Creator	AK Andreas Krischker	Approved by			last Editor	AK Andreas Krischker	Date 13.01.2025		lower tool 1	Sheet 48 from 122

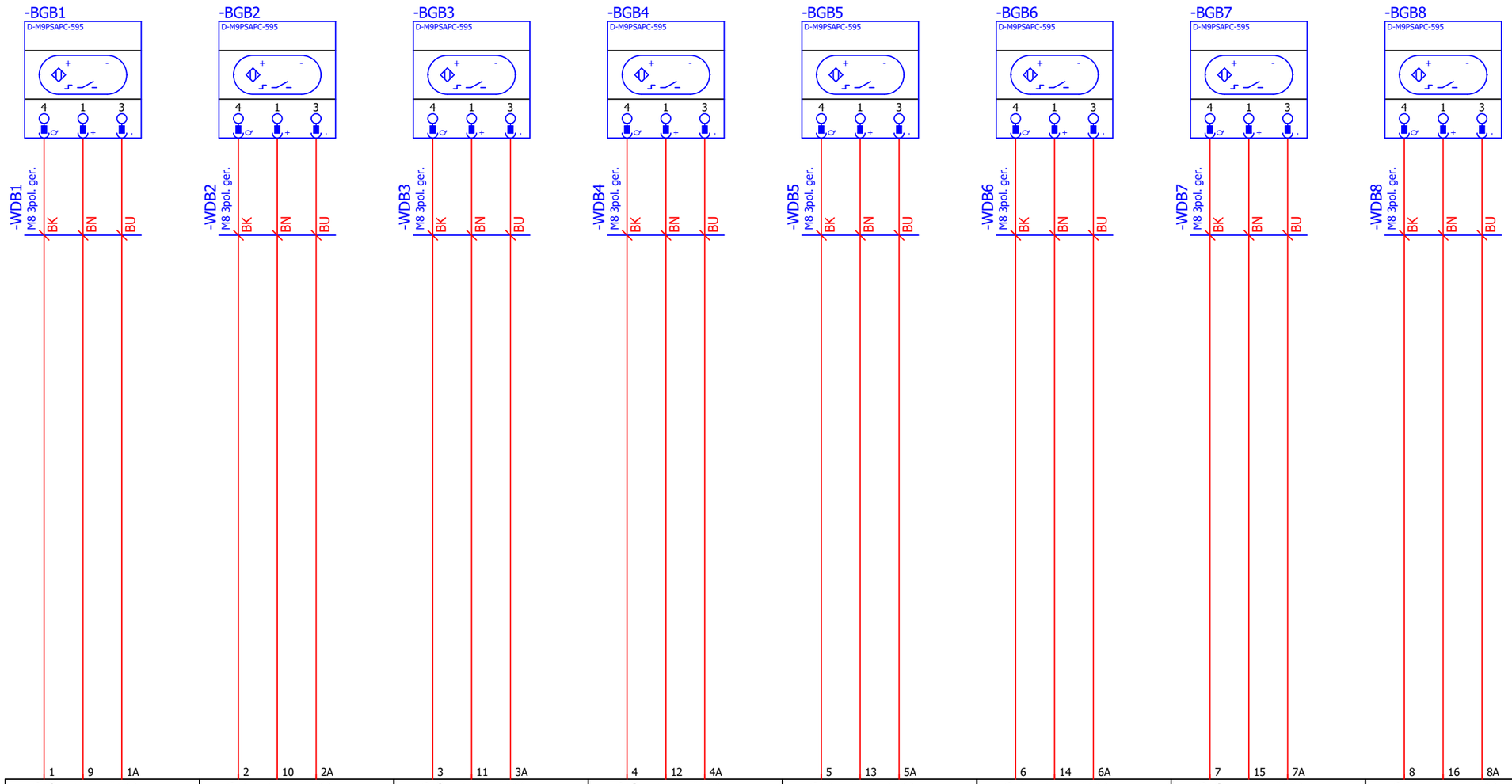

DI0 L+ AUX	DI1 L+ AUX	DI2 L+ AUX	DI3 L+ AUX	DI4 L+ AUX	DI5 L+ AUX	DI6 L+ AUX	DI7 L+ AUX
-KE2	**-KE2**	**-KE2**	**-KE2**	**-KE2**	**-KE2**	**-KE2**	**-KE2**
=PLC+.X01/1.2							
I11501.0	I11501.1	I11501.2	I11501.3	I11501.4	I11501.5	I11501.6	I11501.7
-BGB1:4	-BGB2:4	-BGB3:4	-BGB4:4	-BGB5:4	-BGB6:4	-BGB7:4	-BGB8:4

Heating stroke 1.1.1.1 HP

Heating stroke 1.1.2.1 HP

Heating stroke 1.1.3.1 HP

Heating stroke 1.1.4.1 HP

Heating stroke 2.1.1.1 HP

Heating stroke 2.1.2.1 HP

Heating stroke 2.1.3.1 HP

Heating stroke 2.1.4.1 HP

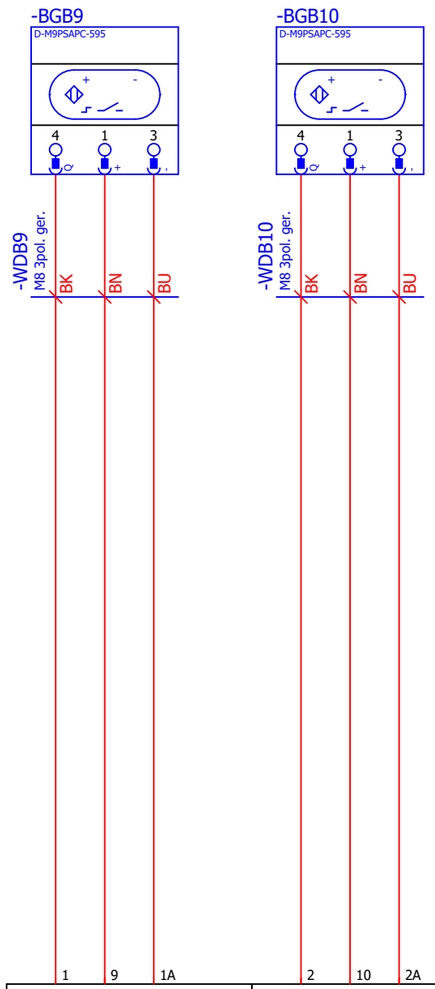

1 9 1A	2 10 2A	3 11 3A	4 12 4A	5 13 5A	6 14 6A	7 15 7A	8 16 8A
DI0 L+ AUX	DI1 L+ AUX	DI2 L+ AUX	DI3 L+ AUX	DI4 L+ AUX	DI5 L+ AUX	DI6 L+ AUX	DI7 L+ AUX
-KE3	**-KE3**	**-KE3**	**-KE3**	**-KE3**	**-KE3**	**-KE3**	**-KE3**
=PLC+.X01/1.3							
I11502.0	I11502.1	I11502.2	I11502.3	I11502.4	I11502.5	I11502.6	I11502.7
-BGB9:4	-BGB10:4	I11502.2	I11502.3	I11502.4	I11502.5	I11502.6	I11502.7

Slider 1.3.1.1 HP

Slider 1.3.2.1 HP

Heating stroke 1.1 WP	Heating stroke 1.1 HP	Heating stroke 2.1 WP	Heating stroke 2.1 HP	Slider 1.3 WP	Slider 1.3 HP
-KHB1:14:+	-KHB1:12:+	-KHB2:14:+	-KHB2:12:+	-KHB3:14:+	-KHB3:12:+
Q11501.0	Q11501.1	Q11501.2	Q11501.3	Q11501.4	Q11501.5
=PLC+.X01/2.5					
-KE12	**-KE12**	**-KE12**	**-KE12**	**-KE12**	**-KE12**
DQ0 M	DQ1 M	DQ2 M	DQ3 M	DQ4 M	DQ5 M

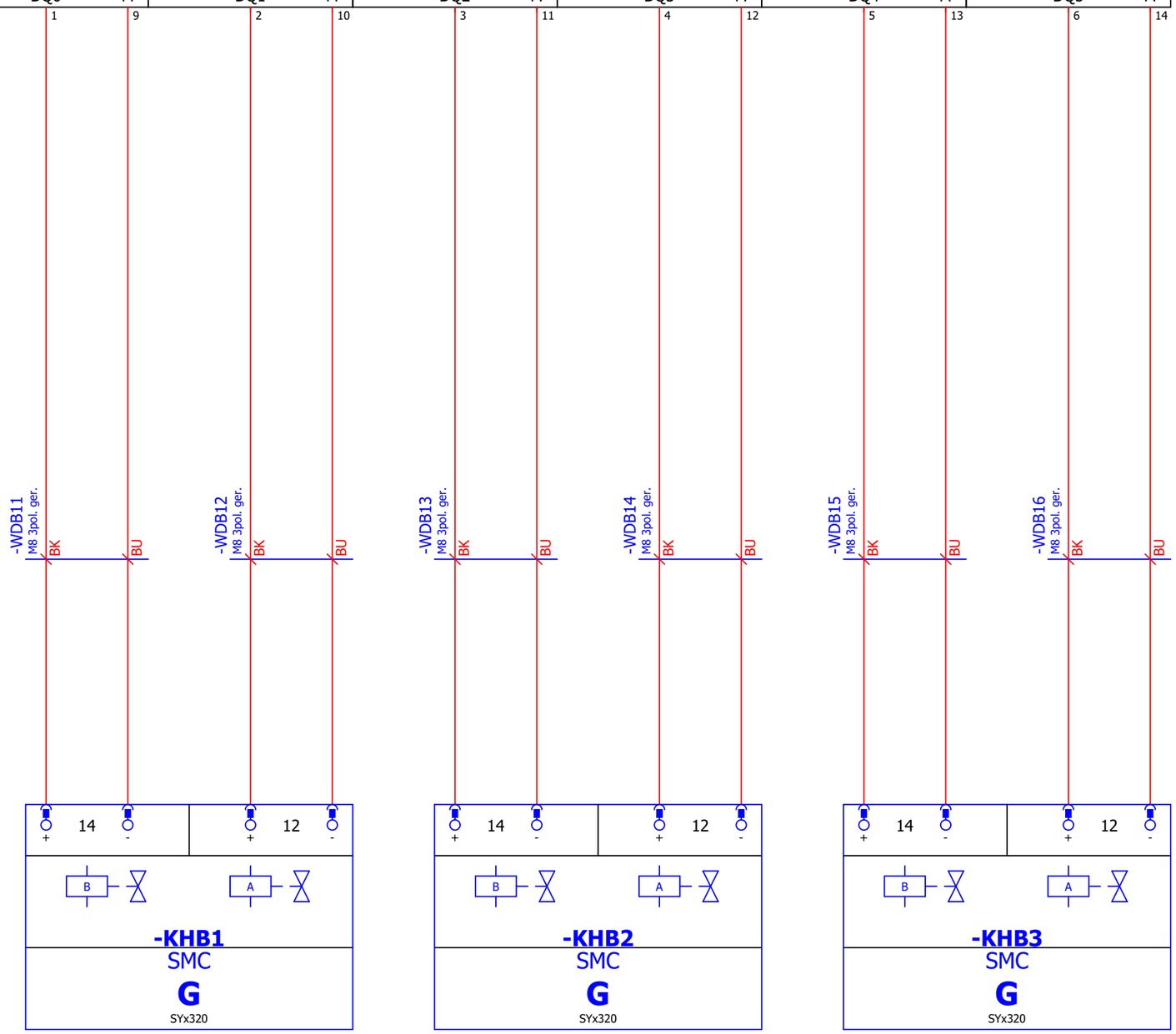

DI0 L+ AUX	DI1 L+ AUX	DI2 L+ AUX	DI3 L+ AUX	DI4 L+ AUX	DI5 L+ AUX	DI6 L+ AUX	DI7 L+ AUX
-KE4	**-KE4**	**-KE4**	**-KE4**	**-KE4**	**-KE4**	**-KE4**	**-KE4**
=PLC+.X01/1.4							
I11003.0	I11003.1	I11003.2	I11003.3	I11003.4	I11003.5	I11003.6	I11003.7
=.01-BGB1:4	=.01-BGB2:4	=.02-BGB1:4	=.02-BGB2:4	=.03-BGB1:4	=.03-BGB2:4	=.04-BGB1:4	=.04-BGB2:4

Edge-fold slider HO 1.3.1.1 HP | Edge-fold slider VE 1.3.1.1 HP | Edge-fold slider HO 1.3.2.1 HP | Edge-fold slider VE 1.3.2.1 HP | Edge-fold slider HO 1.3.3.1 HP | Edge-fold slider VE 1.3.3.1 HP | Edge-fold slider HO 1.4.1.1 HP | Edge-fold slider VE 1.4.1.1 HP

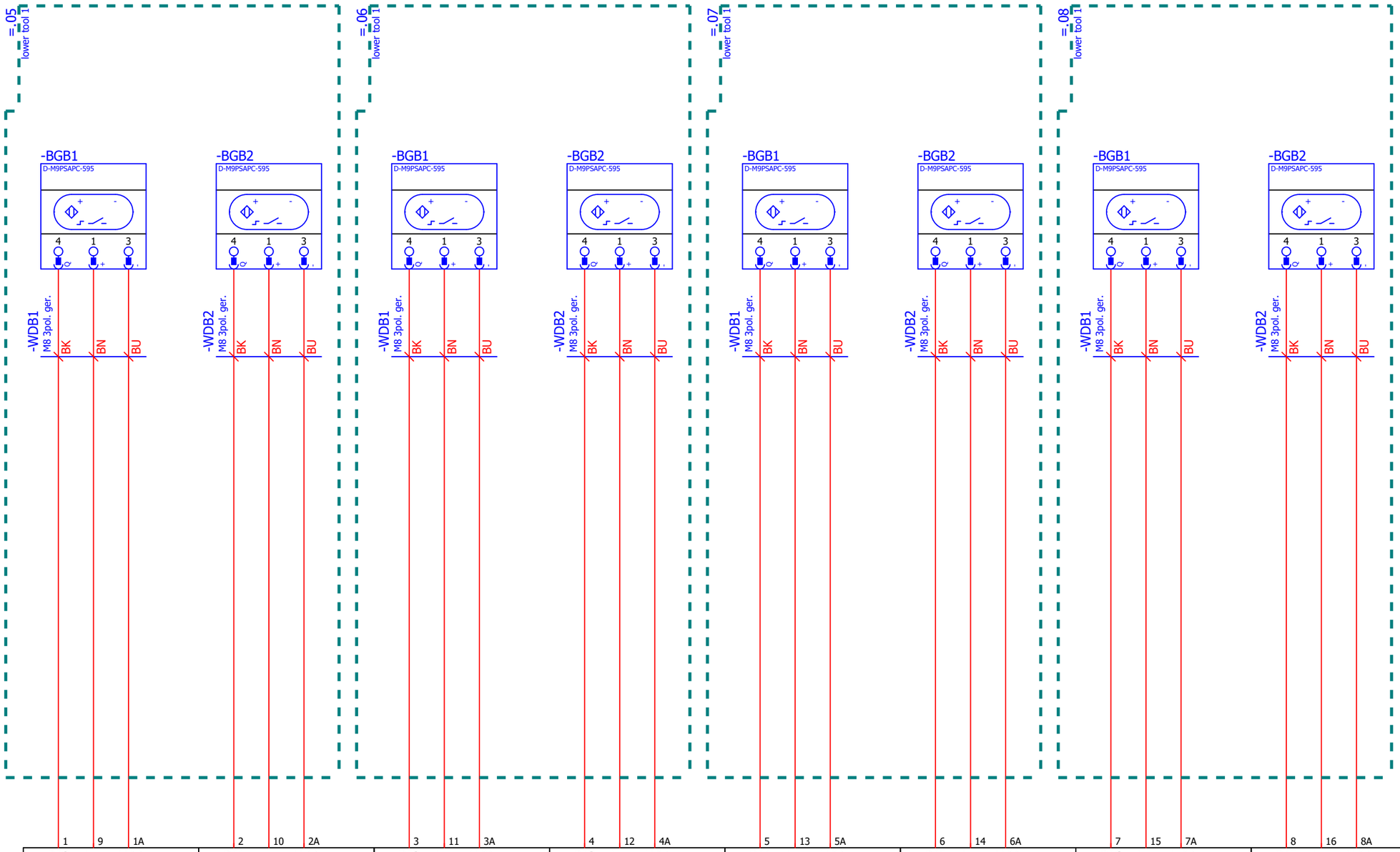

DI0 L+ AUX	DI1 L+ AUX	DI2 L+ AUX	DI3 L+ AUX	DI4 L+ AUX	DI5 L+ AUX	DI6 L+ AUX	DI7 L+ AUX
-KE5	**-KE5**	**-KE5**	**-KE5**	**-KE5**	**-KE5**	**-KE5**	**-KE5**
=PLC+.X01/1.4							
I11004.0	I11004.1	I11004.2	I11004.3	I11004.4	I11004.5	I11004.6	I11004.7
=.05-BGB1:4	=.05-BGB2:4	=.06-BGB1:4	=.06-BGB2:4	=.07-BGB1:4	=.07-BGB2:4	=.08-BGB1:4	=.08-BGB2:4
Edge-fold slider HO 1.4.2.1 HP	Edge-fold slider VE 1.4.2.1 HP	Edge-fold slider HO 1.4.3.1 HP	Edge-fold slider VE 1.4.3.1 HP	Edge-fold slider HO 1.5.1.1 HP	Edge-fold slider VE 1.5.1.1 HP	Edge-fold slider HO 1.5.2.1 HP	Edge-fold slider VE 1.5.2.1 HP

DI0 L+ AUX	DI1 L+ AUX	DI2 L+ AUX	DI3 L+ AUX	DI4 L+ AUX	DI5 L+ AUX	DI6 L+ AUX	DI7 L+ AUX
-KE6	**-KE6**	**-KE6**	**-KE6**	**-KE6**	**-KE6**	**-KE6**	**-KE6**
=PLC+.X01/1.5							
I11005.0	I11005.1	I11005.2	I11005.3	I11005.4	I11005.5	I11005.6	I11005.7
=.09-BGB1:4	=.09-BGB2:4	=.10-BGB1:4	=.10-BGB2:4	=.11-BGB1:4	=.11-BGB2:4	=.12-BGB1:4	=.12-BGB2:4

Edge-fold slider HO 1.6.1.1 HP | Edge-fold slider VE 1.6.1.1 HP | Edge-fold slider HO 2.4.1.1 HP | Edge-fold slider VE 2.4.1.1 HP | Edge-fold slider HO 2.4.2.1 HP | Edge-fold slider VE 2.4.2.1 HP | Edge-fold slider HO 2.5.1.1 HP | Edge-fold slider VE 2.5.1.1 HP

DI0 L+ AUX	DI1 L+ AUX	DI2 L+ AUX	DI3 L+ AUX	DI4 L+ AUX	DI5 L+ AUX	DI6 L+ AUX	DI7 L+ AUX
-KE7	**-KE7**	**-KE7**	**-KE7**	**-KE7**	**-KE7**	**-KE7**	**-KE7**
=PLC+.X01/1.6							
I11006.0	I11006.1	I11006.2	I11006.3	I11006.4	I11006.5	I11006.6	I11006.7
=.13-BGB1:4	=.13-BGB2:4	=.14-BGB1:4	=.14-BGB2:4	=.15-BGB1:4	=.15-BGB2:4	I11006.6	I11006.7

Edge-fold slider HO 2.6.1.1 HP | Edge-fold slider VE 2.6.1.1 HP | Edge-fold slider HO 2.6.2.1 HP | Edge-fold slider VE 2.6.2.1 HP | Edge-fold slider HO 2.6.3.1 HP | Edge-fold slider VE 2.6.3.1 HP

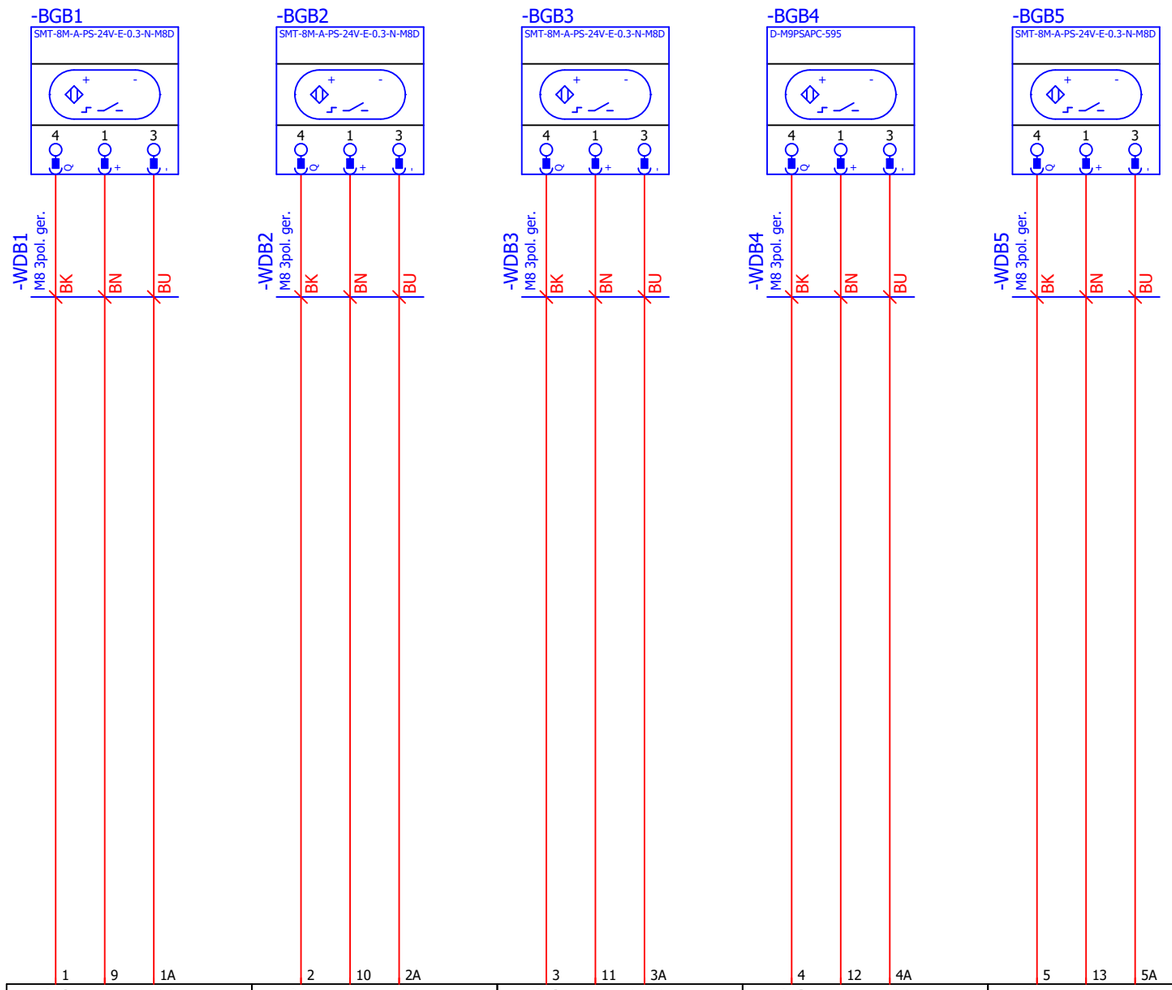

DI0 L+ AUX	DI1 L+ AUX	DI2 L+ AUX	DI3 L+ AUX	DI4 L+ AUX	DI5 L+ AUX	DI6 L+ AUX	DI7 L+ AUX
-KE4	**-KE4**	**-KE4**	**-KE4**	**-KE4**	**-KE4**	**-KE4**	**-KE4**
=PLC+.X01/1.4							
I11503.0	I11503.1	I11503.2	I11503.3	I11503.4	I11503.5	I11503.6	I11503.7
-BGB1:4	-BGB2:4	-BGB3:4	-BGB4:4	-BGB5:4	I11503.5	I11503.6	I11503.7

Gripper 1.2.1.1 HP Gripper 1.2.2.1 HP Gripper 1.2.3.1 HP Gripper 2.2.1.1 HP Gripper 2.2.2.1 HP

=MC02+LT01/4

2

			Job name DAG_BR 449_IP_VAC+EDGE+ITG+WELD+PUNCH		Job number 1011002189	IEC	3CON Anlagenbau GmbH	Queries	==1005803	=ML06	&EFS
			BR 449_IP lower center cover+glove box_LHD_EDGE_TOOL_1+0_1+0		Drawing number 1005803	Version				Gripper/Needles	Wiring diagram
										+UT01	Page 1
Modification	Date	Name	Creator AK Andreas Krischker	Approved by				last Editor KP Kevin Poveleit	Date 06.11.2024	Upper tool 1	Sheet 56 from 122

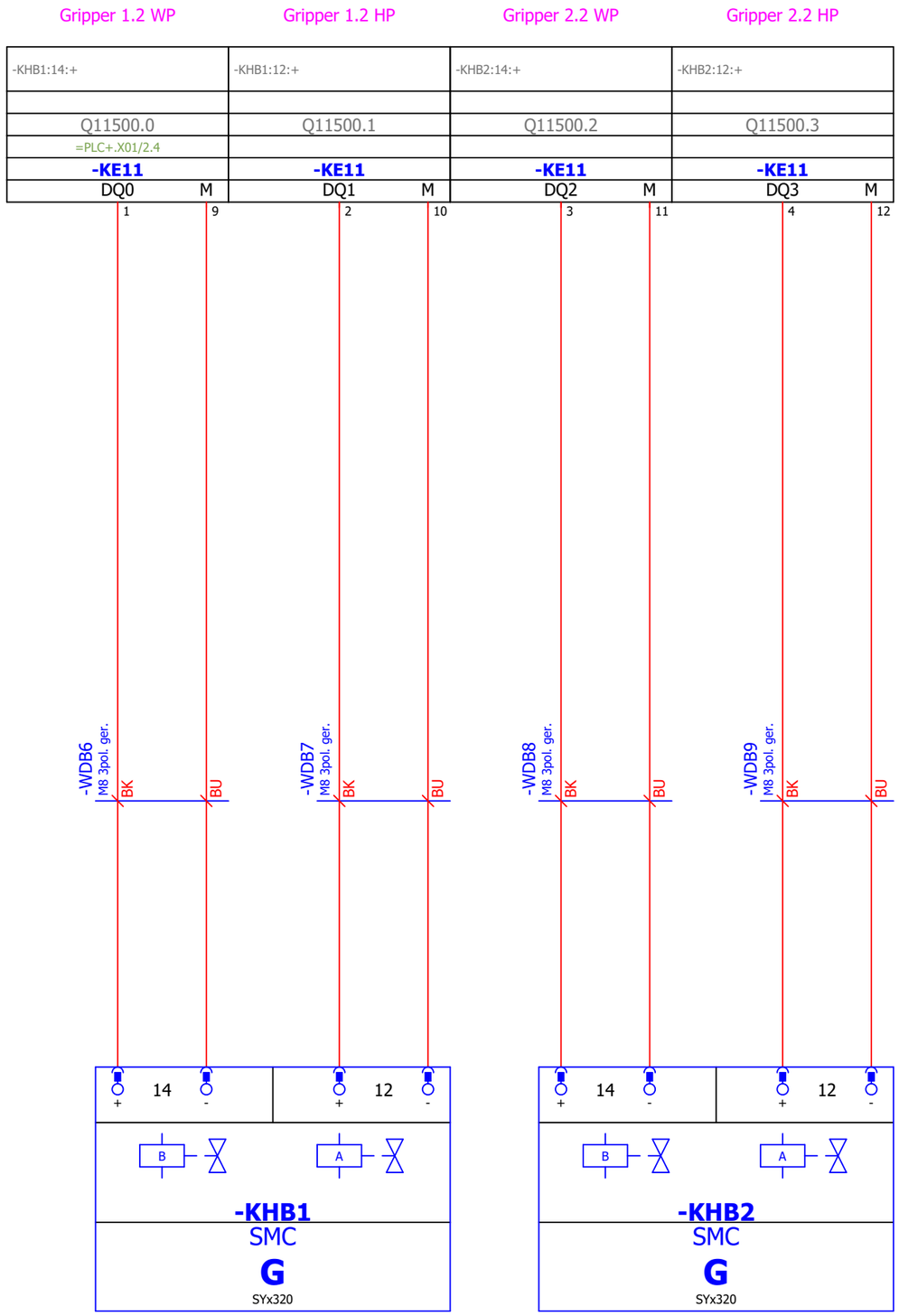

=SA+LT01/1

			Job name DAG_BR 449_IP_VAC+EDGE+ITG+WELD+PUNCH	Job number 1011002189	IEC	3CON Anlagenbau GmbH	Valves	==1005803	=ML06	&EFS	
			BR 449_IP lower center cover+glove box_LHD_EDGE_TOOL_1+0_1+0	Drawing number 1005803	Version				Gripper/Needles	Wiring diagram	
									+UT01	Page 2	
Modification	Date	Name	Creator AK Andreas Krischker	Approved by			last Editor AK Andreas Krischker	Date 03.09.2024	Upper tool 1	Sheet 57 from 122	

0	1	2	3	4	5	6	7	8	9

Foot and Palm switch
-SJC1

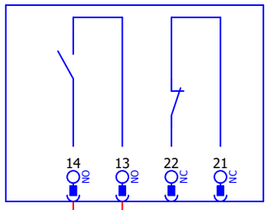

-WD1
5G0,5
CLASSIC 110

1 9

DI0 L+
-KE8
=PLC+.X01/1.6
I11007.0
-SJC1:14

Foot and Palm switch
-SJC2

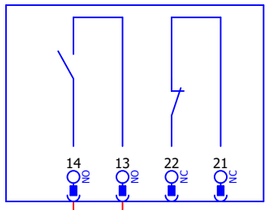

-WD2
5G0,5
CLASSIC 110

2 10

DI1 L+
-KE8
I11007.1
-SJC2:14

Button release part
IP 1.1.1

Button release part
GB 2.1.1

=ML06+UT01/2

=REPORT&EMA3/1

			Job name DAG_BR 449_IP_VAC+EDGE+ITG+WELD+PUNCH		Job number 1011002189	IEC	3CON Anlagenbau GmbH	Gripper UT		==1005803	=SA	&EFS
			BR 449_IP lower center cover+glove box_LHD_EDGE_TOOL_1+0_1+0								Push buttons	Wiring diagram
					Drawing number 1005803	Version					+LT01	Page 1
Modification	Date	Name	Creator AK Andreas Krischker	Approved by				last Editor AK Andreas Krischker	Date 17.09.2024		lower tool 1	Sheet 58 from 122

connector overview

3CON Anlagenbau GmbH

Kleinfeld 16
A-6341 Ebbs

Plug designation	Function text	Plug					Page of plug diagram
		first	last	Total PE	Total N	Total number	
=XS-XS1	Data	PE1	F2	2	0	36	

Connector layout plan

3CON Anlagenbau GmbH
Kleinfeld 16
A-6341 Ebbs

[3CON]_F01_Stecker_V01

Reference indicator	ERP-number	Placement	Designation	Type number	Manufacturer	Ordernumber supplier
=XS-XS1	10011715		Hinged frame	09 14 024 0371	HARTING Technology Group	
	10010866		Pin module	09 14 002 3001	HARTING Technology Group	
	10010875	a	Pin module	09 15 004 3013	HARTING Technology Group	
	10010925	c;d	Pin module	09 14 008 2633	HARTING Technology Group	
	10010927	e	Pin module	09 14 012 2632	HARTING Technology Group	
	10011993	f	Pin module	09 14 002 2646	HARTING Technology Group	
	10008757		Docking frame	09 30 024 1701	HARTING Technology Group	

Equipment list

3CON Anlagenbau GmbH
Kleinfeld 16
A-6341 Ebbs

[3CON_]F03_005_V01

[3CON_]F03_005_V01

device tag	Article designation	X-Ref
=EA+LT01 **-BTA1**	PT100 Contact resistance thermometer, moveable	=EA&EFS/1.0
=EA+LT01 **-BTA2**	PT100 Contact resistance thermometer, moveable	=EA&EFS/1.1
=EA+LT01 **-BTA3**	PT100 Contact resistance thermometer, moveable	=EA&EFS/1.2
=EA+LT01 **-BTA4**	PT100 Contact resistance thermometer, moveable	=EA&EFS/1.3
=KH+LT01 **-KH1**		=KH&EFS1/1.0
=KH+LT01 **-KH1-KHB1**	Valve terminal SS5Y3, SY5220	=KH&EFS1/1.0
=KH+LT01 **-KH1-KHB2**	Valve terminal SS5Y3, SY5220	=KH&EFS1/1.1
=KH+LT01 **-KH1-KHB3**	Single valve SYx320	=KH&EFS1/1.1
=KH+LT01 **-KH1-KHB4**	Single valve SYx320	=KH&EFS1/1.2
=KH+LT01 **-KH1-KHB5**	Single valve SYx320	=KH&EFS1/1.3
=KH+LT01 **-KH1-KHB6**	Single valve SYx320	=KH&EFS1/1.4
=KH+LT01 **-KH1-KHB7**	Single valve SYx320	=KH&EFS1/1.4
=KH+LT01 **-KH1-KHB8**	Single valve SYx320	=KH&EFS1/1.5
=KH+LT01 **-KH1-KHB9**	Single valve SYx320	=KH&EFS1/1.6
=KH+LT01 **-KH1-KHB10**	Single valve SYx320	=KH&EFS1/1.7
=KH+LT01 **-KH1-KHB11**	Single valve SYx320	=KH&EFS1/1.7
=KH+LT01 **-KH1-NBE1**	Valve terminal SS5Y3, SY50M-26-1A	=KH&EFS1/1.8
=KH+LT01 **-KH2**		=KH&EFS1/2.0
=KH+LT01 **-KH2-KHB1**	Valve terminal SS5Y3, SY5220	=KH&EFS1/2.0
=KH+LT01 **-KH2-KHB2**	Valve terminal SS5Y3, SY5220	=KH&EFS1/2.1
=KH+LT01 **-KH2-KHB3**	Valve terminal SS5Y3, SY5220	=KH&EFS1/2.1
=KH+LT01 **-KH2-KHB4**	Single valve SYx320	=KH&EFS1/2.2
=KH+LT01 **-KH2-KHB5**	Single valve SYx320	=KH&EFS1/2.3
=KH+LT01 **-KH2-KHB6**	Single valve SYx320	=KH&EFS1/2.4

device tag	Article designation	X-Ref
=KH+LT01 **-KH2-KHB7**	Single valve SYx320	=KH&EFS1/2.4
=KH+LT01 **-KH2-KHB8**	Single valve SYx320	=KH&EFS1/2.5
=KH+LT01 **-KH2-KHB9**	Single valve SYx320	=KH&EFS1/2.6
=KH+LT01 **-KH2-KHB10**	Single valve SYx320	=KH&EFS1/2.7
=KH+LT01 **-KH2-NBE1**	Valve terminal SS5Y3, SY50M-26-1A	=KH&EFS1/2.7
=KH+LT01 **-KH2-NBE2**	Valve terminal SS5Y3, SY50M-26-1A	=KH&EFS1/2.8
=BA05+LT01 **-BGB1**	Measuring Amplifier Fiber optic, M8 4pin	=BA05&EFS/1.0
=BA05+LT01 **-BGB2**	Measuring Amplifier Fiber optic, M8 4pin	=BA05&EFS/1.1
=BA05+LT01 **-BGB3**	Measuring Amplifier Fiber optic, M8 4pin	=BA05&EFS/1.2
=BA05+LT01 **-BGB4**	Measuring Amplifier Fiber optic, M8 4pin	=BA05&EFS/1.3
=MC01+LT01 **-BGB1**	Inductive sensor BES M08ZE1-PSC20B-S49G, M8 3-pin	=MC01&EFS/1.0
=MC01+LT01 **-BGB2**	Inductive sensor BES M08ZE1-PSC20B-S49G, M8 3-pin	=MC01&EFS/1.1
=MC01+LT01 **-BGB3**	Inductive sensor BES M08ZE1-PSC20B-S49G, M8 3-pin	=MC01&EFS/1.2
=MC01+LT01 **-BGB4**	Inductive sensor BES M08ZE1-PSC20B-S49G, M8 3-pin	=MC01&EFS/1.3
=MC01+LT01 **-BGB5**	Proximity sensor Cylinder, M8 3-pin, straight	=MC01&EFS/1.4
=MC01+LT01 **-BGB6**	Proximity sensor Cylinder, M8 3-pin, straight	=MC01&EFS/1.5
=MC01+LT01 **-BGB7**	Proximity sensor Cylinder, M8 3-pin, straight	=MC01&EFS/1.6
=MC01+LT01 **-BGB8**	Proximity sensor Cylinder, M8 3-pin, straight	=MC01&EFS/1.7
=MC01+LT01 **-BGB9**	Inductive sensor BES M08ZE1-PSC20B-S49G, M8 3-pin	=MC01&EFS/2.0
=MC01+LT01 **-BGB10**	Inductive sensor BES M08ZE1-PSC20B-S49G, M8 3-pin	=MC01&EFS/2.1
=SA+LT01 **-SJC1**	Foot and Palm switch 1S+1OE, schwarz	=SA&EFS/1.0
=SA+LT01 **-SJC2**	Foot and Palm switch 1S+1OE, schwarz	=SA&EFS/1.5
=MC02.01+LT01 **-BGB1**	Proximity sensor Cylinder, M8 3-pin, straight	=MC02&EFS/1.0
=MC02.01+LT01 **-BGB2**	Proximity sensor Cylinder, M8 3-pin, straight	=MC02&EFS/1.1

Equipment list

3CON Anlagenbau GmbH
Kleinfeld 16
A-6341 Ebbs

[3CON_]F03_005_V01

[3CON_]F03_005_V01

device tag	Article designation	X-Ref
=MC02.02+LT01 **-BGB1**	Proximity sensor Cylinder, M8 3-pin, straight	=MC02&EFS/1.2
=MC02.02+LT01 **-BGB2**	Proximity sensor Cylinder, M8 3-pin, straight	=MC02&EFS/1.3
=MC02.03+LT01 **-BGB1**	Proximity sensor Cylinder, M8 3-pin, straight	=MC02&EFS/1.4
=MC02.03+LT01 **-BGB2**	Proximity sensor Cylinder, M8 3-pin, straight	=MC02&EFS/1.5
=MC02.04+LT01 **-BGB1**	Proximity sensor Cylinder, M8 3-pin, straight	=MC02&EFS/1.6
=MC02.04+LT01 **-BGB2**	Proximity sensor Cylinder, M8 3-pin, straight	=MC02&EFS/1.7
=MC02.05+LT01 **-BGB1**	Proximity sensor Cylinder, M8 3-pin, straight	=MC02&EFS/2.0
=MC02.05+LT01 **-BGB2**	Proximity sensor Cylinder, M8 3-pin, straight	=MC02&EFS/2.1
=MC02.06+LT01 **-BGB1**	Proximity sensor Cylinder, M8 3-pin, straight	=MC02&EFS/2.2
=MC02.06+LT01 **-BGB2**	Proximity sensor Cylinder, M8 3-pin, straight	=MC02&EFS/2.3
=MC02.07+LT01 **-BGB1**	Proximity sensor Cylinder, M8 3-pin, straight	=MC02&EFS/2.4
=MC02.07+LT01 **-BGB2**	Proximity sensor Cylinder, M8 3-pin, straight	=MC02&EFS/2.5
=MC02.08+LT01 **-BGB1**	Proximity sensor Cylinder, M8 3-pin, straight	=MC02&EFS/2.6
=MC02.08+LT01 **-BGB2**	Proximity sensor Cylinder, M8 3-pin, straight	=MC02&EFS/2.7
=MC02.09+LT01 **-BGB1**	Proximity sensor Cylinder, M8 3-pin, straight	=MC02&EFS/3.0
=MC02.09+LT01 **-BGB2**	Proximity sensor Cylinder, M8 3-pin, straight	=MC02&EFS/3.1
=MC02.10+LT01 **-BGB1**	Proximity sensor Cylinder, M8 3-pin, straight	=MC02&EFS/3.2
=MC02.10+LT01 **-BGB2**	Proximity sensor Cylinder, M8 3-pin, straight	=MC02&EFS/3.3
=MC02.11+LT01 **-BGB1**	Proximity sensor Cylinder, M8 3-pin, straight	=MC02&EFS/3.4
=MC02.11+LT01 **-BGB2**	Proximity sensor Cylinder, M8 3-pin, straight	=MC02&EFS/3.5
=MC02.12+LT01 **-BGB1**	Proximity sensor Cylinder, M8 3-pin, straight	=MC02&EFS/3.6
=MC02.12+LT01 **-BGB2**	Proximity sensor Cylinder, M8 3-pin, straight	=MC02&EFS/3.7
=MC02.13+LT01 **-BGB1**	Proximity sensor Cylinder, M8 3-pin, straight	=MC02&EFS/4.0
=MC02.13+LT01 **-BGB2**	Proximity sensor Cylinder, M8 3-pin, straight	=MC02&EFS/4.1

device tag	Article designation	X-Ref
=MC02.14+LT01 **-BGB1**	Proximity sensor Cylinder, M8 3-pin, straight	=MC02&EFS/4.2
=MC02.14+LT01 **-BGB2**	Proximity sensor Cylinder, M8 3-pin, straight	=MC02&EFS/4.3
=MC02.15+LT01 **-BGB1**	Proximity sensor Cylinder, M8 3-pin, straight	=MC02&EFS/4.4
=MC02.15+LT01 **-BGB2**	Proximity sensor Cylinder, M8 3-pin, straight	=MC02&EFS/4.5

Summarized parts list

3CON Anlagenbau GmbH
Kleinfeld 16
A-6341 Ebbs

[3CON]_F02_002_V01

Article number	Quantity QU	Designation	Type number	Picture	Pos.
SMC.VI_SS5Y3_10	2				1
BAL.BCC0K8J	4 pc	M8 4pin straight Sensor-/Aktor-Leitungen, 5m	BCC M314-0000-10-003-PX0434-050-C003		2
BAL.BES060N	6 pc	Inductive sensor BES M08ZE1-PSC20B-S49G, M8 3-pin	BES060N		3
BAL.BCC0KKP	40 pc	M8 3pin straight Sensor-/Aktor-Leitungen, 10m	BCC M313-0000-10-001-PX0334-100-C003		4
ETN.FAK-S-KC11-I	2 pc	Foot and Palm switch 1S+1OE, schwarz	FAK-S/KC11/I		5
FES.575418	2 pc	Connecting cabl VTUG multi-pole terminal 25pin fixed 5m	NEBV-S1G25-K-5-N-LE25-S6		6
HAR.09 14 024 0371	1 pc	Hinged frame Size: 24 B, 6 Module a-f	09 14 024 0371		7
HAR.09 14 002 3001	1 pc	Pin module modular Quintax	09 14 002 3001		8

Summarized parts list

3CON Anlagenbau GmbH
Kleinfeld 16
A-6341 Ebbs

[3CON]_F02_002_V01

Article number	Quantity QU	Designation	Type number	Picture	Pos.
HAR.09 15 004 3013	1 pc	Pin module modular Quintax, 4pin, 10A, shielded, without crimp contacts	09 15 004 3013		9
HAR.09 14 008 2633	2 pc	Pin module modular, 8pin, 16A, Quick-Lock connection	09 14 008 2633		10
HAR.09 14 012 2632	1 pc	Pin module modular, 12pin, 10A, Quick-Lock connection	09 14 012 2632		11
HAR.09 14 002 2646	1 pc	Pin module modular, 2pin 70A, 6-16mm², axial screw connection	09 14 002 2646		12
HAR.09 30 024 1701	1 pc	Docking frame Size: 24 B	09 30 024 1701		13
JUM.TN 00635743	4 pc	PT100 Contact resistance thermometer, moveable	902550/99-378-1003-1-11-5000/315		14
KEY.FS-N11CP	4 pc	Measuring Amplifier Fiber optic, M8 4pin	FS-N11CP		15
KEY.FU-6F	4 pc	Fiber optic sensor	FU-6F		16

Summarized parts list

3CON Anlagenbau GmbH
Kleinfeld 16
A-6341 Ebbs

[3CON]_F02_002_V01

Article number	Quantity QU	Designation	Type number	Picture	Pos.
LAPP.1119005	2 meter	ÖLFLEX CLASSIC 110 5G0,5	1119005		17
SMC.VT_SS5Y3_10_SY5220	5 pc	Valve terminal SS5Y3, SY5220			18
SMC.SV_SYx320	16 pc	Single valve SYx320			19
SMC.VT_SS5Y3-10_SY50M	3 Übersetzung fehlt	Valve terminal SS5Y3, SY50M-26-1A			20
SMC.D-M9PSAPC-595	34 pc	Proximity sensor Cylinder, M8 3-pin, straight	D-M9PSAPC-595		21

0	1	2	3	4	5	6	7	8	9

S1:Montageplatte

+LT01&EPC1/3

0	1	2	3	4	5	6	7	8	9

LT01.X01

0	1	2	3	4	5	6	7	8	9

S1:Montageplatte

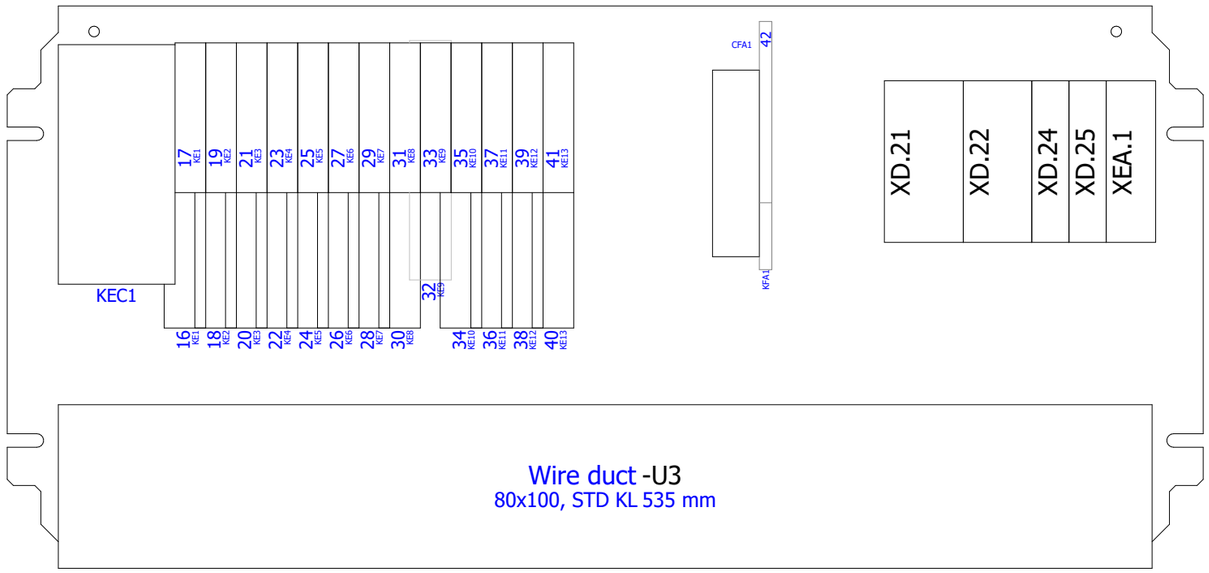

S1:Montageplatte

3 5

			Job name DAG_BR 449_IP_VAC+EDGE+ITG+WELD+PUNCH		Job number 1011002189	IEC	3CON Anlagenbau GmbH	S1:Montageplatte	==1005803	=REPORT	&ELU
			BR 449_IP lower center cover+glove box_LHD_EDGE_TOOL_1+0_1+0							Project-related evaluations	In/on-equipment location
					Drawing number 1005803	Version				+LT01.X01	Page 4
Modification	Date	Name	Creator AK Andreas Krischker	Approved by				last Editor C.DEMIR	Date 16.01.2025	lower tool 1	Sheet 69 from 122

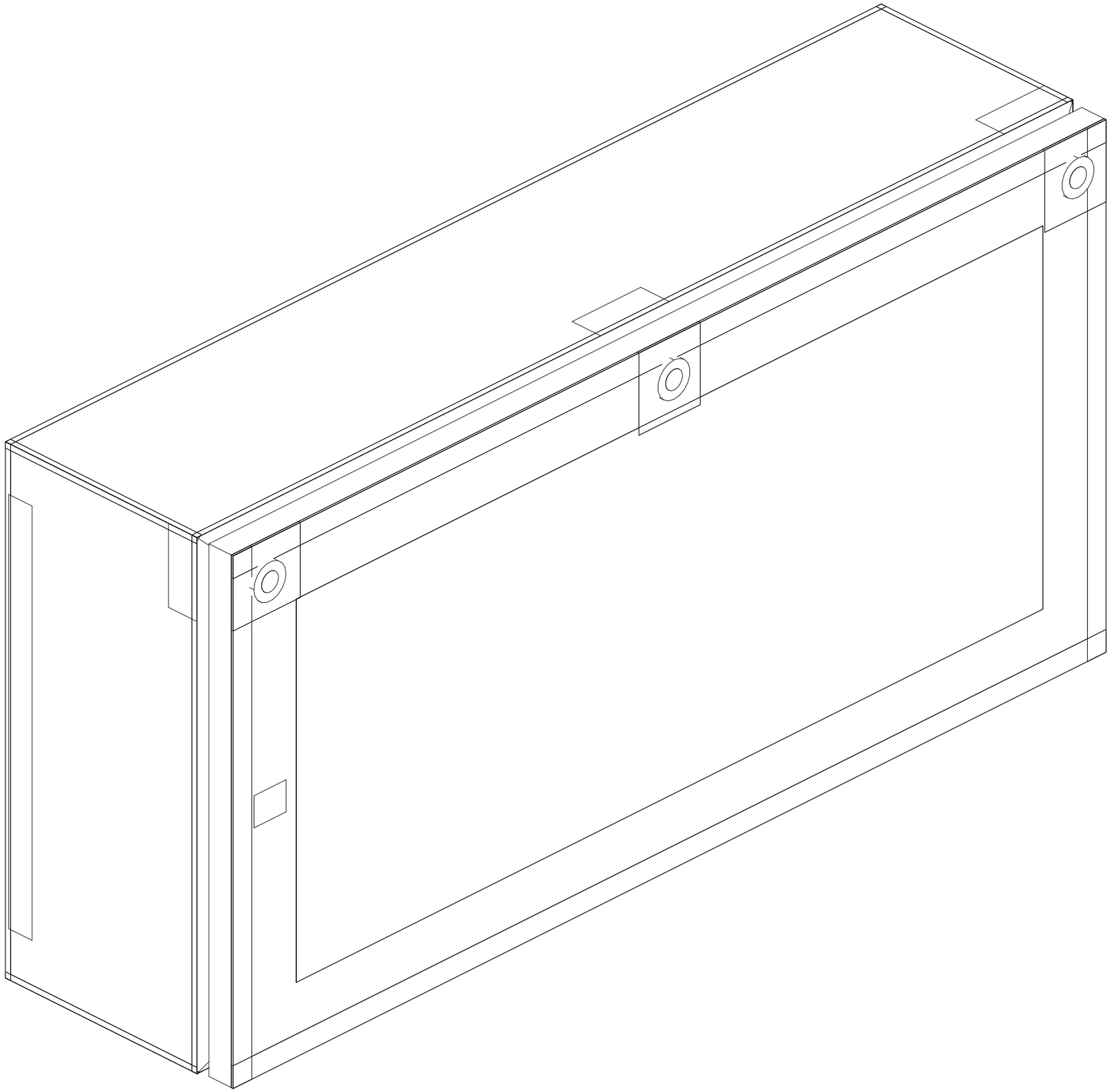

LT01.X01

4

6

			Job name DAG_BR 449_IP_VAC+EDGE+ITG+WELD+PUNCH		Job number 1011002189	IEC	3CON Anlagenbau GmbH	LT01.X01	==1005803	=REPORT	&ELU
			BR 449_IP lower center cover+glove box_LHD_EDGE_TOOL_1+0_1+0		Drawing number 1005803	Version				Project-related evaluations	In/on-equipment location
										+LT01.X01	Page 5
Modification	Date	Name	Creator AK Andreas Krischker	Approved by				last Editor C.DEMIR	Date 16.01.2025	lower tool 1	Sheet 70 from 122

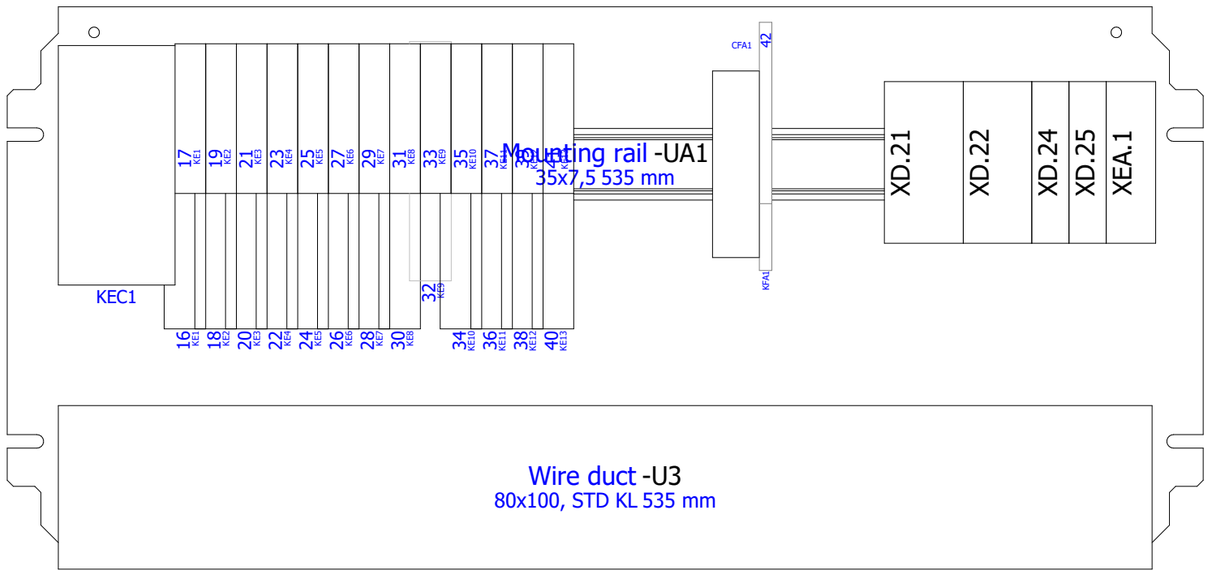

S1:Montageplatte

5 7

			Job name DAG_BR 449_IP_VAC+EDGE+ITG+WELD+PUNCH		Job number 1011002189	IEC	3CON Anlagenbau GmbH	S1:Montageplatte	==1005803	=REPORT	&ELU
			BR 449_IP lower center cover+glove box_LHD_EDGE_TOOL_1+0_1+0				3Con TECHNOLOGY FOR YOU			Project-related evaluations	In/on-equipment location
					Drawing number 1005803	Version				+LT01.X01	Page 6
Modification	Date	Name	Creator AK Andreas Krischker	Approved by				last Editor C.DEMIR	Date 16.01.2025	lower tool 1	Sheet 71 from 122

0	1	2	3	4	5	6	7	8	9

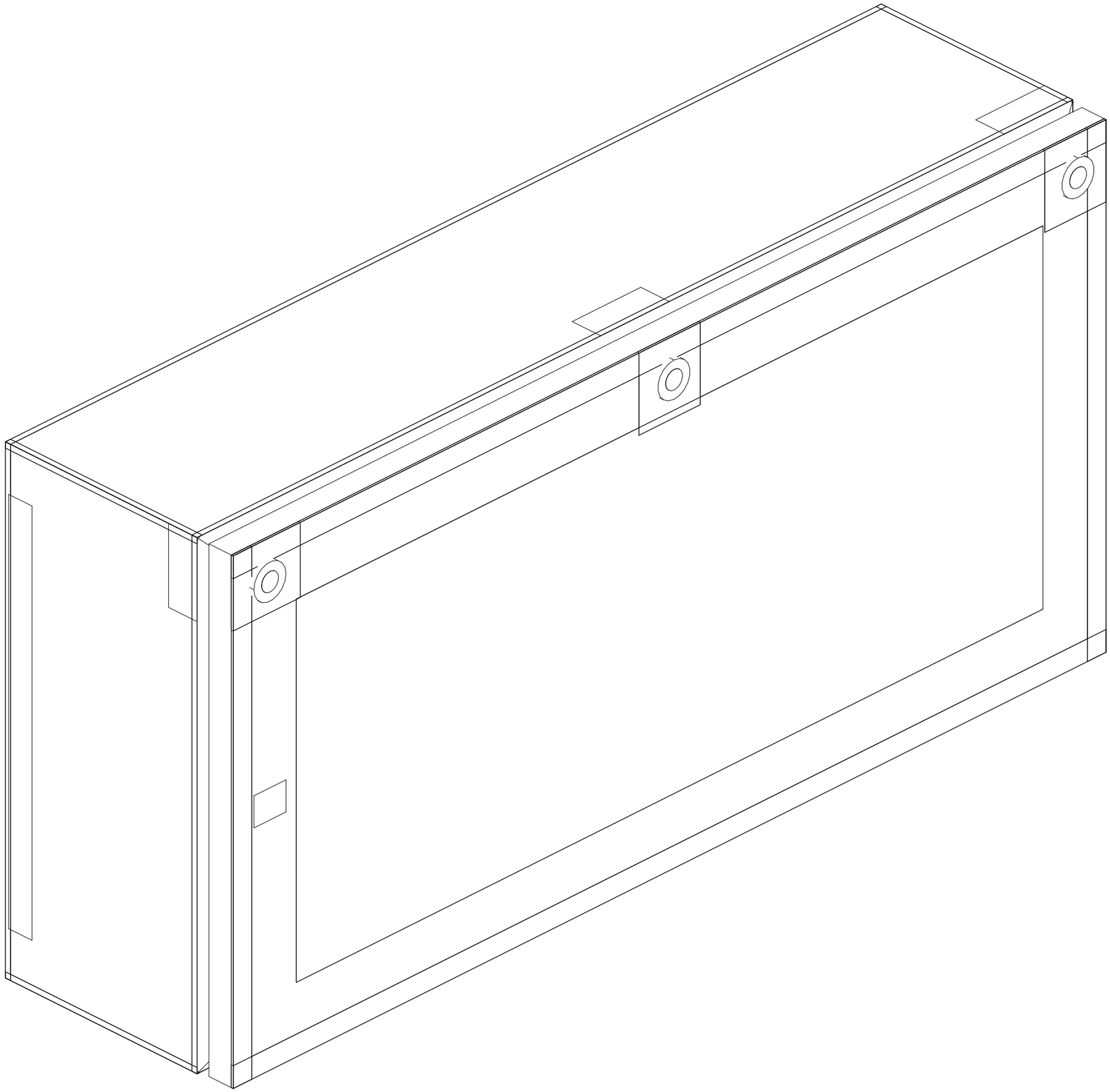

LT01.X01

6

&EMA1/1

			Job name DAG_BR 449_IP_VAC+EDGE+ITG+WELD+PUNCH		Job number 1011002189	IEC	3CON Anlagenbau GmbH	LT01.X01		==1005803	=REPORT	&ELU
			BR 449_IP lower center cover+glove box_LHD_EDGE_TOOL_1+0_1+0								Project-related evaluations	In/on-equipment location
					Drawing number 1005803	Version					+LT01.X01	Page 7
Modification	Date	Name	Creator AK Andreas Krischker	Approved by				last Editor C.DEMIR	Date 16.01.2025		lower tool 1	Sheet 72 from 122

Terminal-strip overview

3CON Anlagenbau GmbH
Kleinfeld 16
A-6341 Ebbs

[3CON]_F14_002_V01

Terminal strip	Function text	Terminals					Page of the terminal diagram
		first	last	Total PE	Total N	Total number	
-XD.21		1	6	0	0	6	==1005803=REPORT+LT01.X01&EMA2/1
-XD.22		1	5	0	0	5	==1005803=REPORT+LT01.X01&EMA2/2
-XD.24		1	2	0	0	2	==1005803=REPORT+LT01.X01&EMA2/3
-XD.25		1	2	0	0	2	==1005803=REPORT+LT01.X01&EMA2/4
-XEA.1		1	2	2	0	2	==1005803=REPORT+LT01.X01&EMA2/5

Terminal diagram

3CON Anlagenbau GmbH
Kleinfeld 16
A-6341 Ebbs

[3CON]_F13_001_V01

Terminal diagram
==1005803+LT01.X01-XD.21

Function:
Installation location: Terminal box lower tool 1

1	
2	
3	
4	
5	
6	
7	
8	
9	
10	

	1	2	3	4	5	6	7	8	9	10
Function text										
GND										
GND										
GND										
GND										
GND										
GND										

ZDU 2.5/4AN

Target designation	Connection	Terminal connection	Terminal	Terminal connection	Saddle jumper	Wire bridges	PLC connection point	Target designation	Connection
=PLC-CFA1	2	b	**1**	a				=XS+LT01-XS1	C1
=PLC-KEC1	-X80:2	c							
=PLC-KE1	9A	d							
=PLC-KE11	9A	b	**2**	a				=PLC-KE10	9A
		c							
		d							
		b	**3**	a					
		c							
		d							
		b	**4**	a					
		c							
		d							
		b	**5**	a					
		c							
		d							
		b	**6**	a					
		c							
		d							

1	=GD24-WDB1	CLASSIC 110 7x2,5 mm²
2		
3		
4		
5		
6		
7		
8		
9		
10		

10	9	8	7	6	5	4	3	2	1	Page / column
									1	=GD24&EFS/1.1
										=GD24&EFS/1.1
										=GD24&EFS/1.2
										=GD24&EFS/1.2
										=GD24&EFS/1.3
										=GD24&EFS/1.3

Terminal diagram

3CON Anlagenbau GmbH
Kleinfeld 16
A-6341 Ebbs

[3CON]_F13_001_V01

Terminal diagram
==1005803+LT01.X01-XD.22

Function:
Installation location: Terminal box lower tool 1

1	
2	
3	
4	
5	
6	
7	
8	
9	
10	

1	=GD24-WDB1	CLASSIC 110 7x2,5 mm²
2		
3		
4		
5		
6		
7		
8		
9		
10		

Function text	1	2	3	4	5	6	7	8	9	10	Target designation	Connection	Terminal connection	Terminal	Terminal connection	Saddle jumper	Wire bridges	PLC connection point	Target designation	Connection	10	9	8	7	6	5	4	3	2	1	Page / column
											ZDU 2.5/4AN																				
24Vdc Control voltage											=PLC-KFA1	11	b	**1**	a				=XS+LT01-XS1	C2										2	=GD24&EFS/1.1
											=PLC-KEC1	-X80:1	c																		
											=PLC-KE1	L	d																		
24Vdc Control voltage													b	**2**	a				=PLC-KE10	L											=GD24&EFS/1.1
													c																		
													d																		
24Vdc Control voltage													b	**3**	a																=GD24&EFS/1.2
													c																		
													d																		
24Vdc Control voltage													b	**4**	a																=GD24&EFS/1.2
													c																		
													d																		
24Vdc Control voltage													b	**5**	a																=GD24&EFS/1.3
													c																		
													d																		

Terminal diagram

3CON Anlagenbau GmbH
Kleinfeld 16
A-6341 Ebbs

[3CON]_F13_001_V01

Terminal diagram
==1005803+LT01.X01-XD.24

Function:
Installation location: Terminal box lower tool 1

1	=GD24-WDB1 CLASSIC 110 7x2,5 mm²
2	
3	
4	
5	
6	
7	
8	
9	
10	

Function text	1	2	3	4	5	6	7	8	9	10	Target designation	Connection	Terminal connection	Terminal	Terminal connection	Saddle jumper	Wire bridges	PLC connection point	Target designation	Connection	10	9	8	7	6	5	4	3	2	1	Page / column
											ZDU 2.5/4AN																				
Emergency stop general													b	**1**	a				=XS+LT01-XS1	C3										3	=GD24&EFS/1.4
													c																		
													d																		
Emergency stop general													b	**2**	a																=GD24&EFS/1.4
													c																		
													d																		

			Job name DAG_BR 449_IP_VAC+EDGE+ITG+WELD+PUNCH		Job number 1011002189	IEC	3CON Anlagenbau GmbH	Klemmenplan ==1005803+LT01.X01-XD.24	==1005803	=REPORT	&EMA2
			BR 449_IP lower center cover+glove box_LHD_EDGE_TOOL_1+0_1+0							Project-related evaluations	Terminal diagram
					Drawing number 1005803	Version				+LT01.X01	Page 3
Modification	Date	Name	Creator AK Andreas Krischker	Approved by				last Editor AK Andreas Krischker	Date 03.09.2024	lower tool 1	Sheet 76 from 122

Terminal diagram

3CON Anlagenbau GmbH
Kleinfeld 16
A-6341 Ebbs

[3CON]_F13_001_V01

Terminal diagram
==1005803+LT01.X01-XD.25

Function:
Installation location: Terminal box lower tool 1

1	=GD24-WDB1 CLASSIC 110 7x2,5 mm²
2	
3	
4	
5	
6	
7	
8	
9	
10	

Function text	1	2	3	4	5	6	7	8	9	10	Target designation	Connection	Terminal connection	Terminal	Terminal connection	Saddle jumper	Wire bridges	PLC connection point	Target designation	Connection	10	9	8	7	6	5	4	3	2	1	Page / column
											ZDU 2.5/4AN																				
Emergency Stop LT01											=PLC-KE11	L	b	**1**	a				=XS+LT01-XS1	C4										4	=GD24&EFS/1.5
													c																			
													d																			
Emergency stop insert area													b	**2**	a																=GD24&EFS/1.6
													c																			
													d																			

			Job name DAG_BR 449_IP_VAC+EDGE+ITG+WELD+PUNCH		Job number 1011002189	IEC	3CON Anlagenbau GmbH	Klemmenplan ==1005803+LT01.X01-XD.25	==1005803	=REPORT	&EMA2
			BR 449_IP lower center cover+glove box_LHD_EDGE_TOOL_1+0_1+0							Project-related evaluations	Terminal diagram
					Drawing number 1005803	Version				+LT01.X01	Page 4
Modification	Date	Name	Creator AK Andreas Krischker	Approved by				last Editor AK Andreas Krischker	Date 03.09.2024	lower tool 1	Sheet 77 from 122

Terminal diagram

3CON Anlagenbau GmbH
Kleinfeld 16
A-6341 Ebbs

[3CON]_F13_001_V01

Terminal diagram
==1005803+LT01.X01-XEA.1

Function:
Installation location: Terminal box lower tool 1

	Function text	1	2	3	4	5	6	7	8	9	10
1											
2											
3											
4											
5											
6											
7											
8											
9											
10											

Target designation	Connection	Terminal connection	Terminal	Terminal connection	Saddle jumper	Wire bridges	PLC connection point	Target designation	Connection
ZPE 2.5/4AN									
		b	1 ⏚	a				=XS+LT01-XS1	PE1
		c							
		d							
		b	2 ⏚	a					
		c							
		d							

	1	2	3	4	5	6	7	8	9	10	Page / column
1	=GD24-WDB1										CLASSIC 110 7x2,5 mm²
2											
3											
4											
5											
6											
7											
8											
9											
10											
										GNYE	=GD24&EFS/1.4
											=GD24&EFS/1.4

			Job name DAG_BR 449_IP_VAC+EDGE+ITG+WELD+PUNCH		Job number 1011002189	IEC	3CON Anlagenbau GmbH	Klemmenplan ==1005803+LT01.X01-XEA.1	==1005803	=REPORT	&EMA2
			BR 449_IP lower center cover+glove box_LHD_EDGE_TOOL_1+0_1+0							Project-related evaluations	Terminal diagram
					Drawing number 1005803	Version				+LT01.X01	Page 5
Modification	Date	Name	Creator AK Andreas Krischker	Approved by				last Editor AK Andreas Krischker	Date 03.09.2024	lower tool 1	Sheet 78 from 122

Equipment list

3CON Anlagenbau GmbH
Kleinfeld 16
A-6341 Ebbs

[3CON_]F03_005_V01

[3CON_]F03_005_V01

device tag	Article designation	X-Ref
+LT01.X01 **-U1**	Bus enclosure KX 600x300x155, without gland plate	(==1005803+LT01.X01.S1)
+LT01.X01 **-U2**	Mounting plate KX 600x300 mm	(==1005803+LT01.X01.S1)
+LT01.X01 **-U3**	Wire duct 80x100, STD KL	(==1005803+LT01.X01.S1)
+LT01.X01 **-UA1**	Mounting rail 35x7,5	(==1005803+LT01.X01.S1)
=PLC+LT01.X01 **-CFA1**	Web- and Applikationsserver	=+&EFA/1.4
=PLC+LT01.X01 **-KE1**	ET 200SP DI 8x24VDC ST	=PLC&EFS/1.2
=PLC+LT01.X01 **-KE2**	ET 200SP DI 8x24VDC ST	=PLC&EFS/1.2
=PLC+LT01.X01 **-KE3**	ET 200SP DI 8x24VDC ST	=PLC&EFS/1.3
=PLC+LT01.X01 **-KE4**	ET 200SP DI 8x24VDC ST	=PLC&EFS/1.4
=PLC+LT01.X01 **-KE5**	ET 200SP DI 8x24VDC ST	=PLC&EFS/1.4
=PLC+LT01.X01 **-KE6**	ET 200SP DI 8x24VDC ST	=PLC&EFS/1.5
=PLC+LT01.X01 **-KE7**	ET 200SP DI 8x24VDC ST	=PLC&EFS/1.6
=PLC+LT01.X01 **-KE8**	ET 200SP DI 8x24VDC ST	=PLC&EFS/1.6
=PLC+LT01.X01 **-KE9**	ET 200SP AI 4xRTD/TC 2-/4-WIRE HF	=PLC&EFS/2.1
=PLC+LT01.X01 **-KE10**	ET 200SP DQ 8x24VDC 0,5A ST	=PLC&EFS/2.2
=PLC+LT01.X01 **-KE11**	ET 200SP DQ 16x24VDC 0,5A ST	=PLC&EFS/2.2
=PLC+LT01.X01 **-KE12**	ET 200SP DQ 16x24VDC 0,5A ST	=PLC&EFS/2.3
=PLC+LT01.X01 **-KE13**	ET 200SP DQ 16x24VDC 0,5A ST	=PLC&EFS/2.4
=PLC+LT01.X01 **-KEC1**	ET 200SP IM 155-6PN ST incl. BA 2xRJ45	=+&EFA/1.4
=PLC+LT01.X01 **-KFA1**	Relais 6A 250Vac, 1 PDT ,24Vdc	=PLC&EFS/3.8

device tag	Article designation	X-Ref

Summarized parts list

3CON Anlagenbau GmbH
Kleinfeld 16
A-6341 Ebbs

[3CON]_F02_002_V01

Article number	Quantity QU	Designation	Type number	Picture	Pos.
HAGER.BA7100080	1 pc	Wire duct 80x100, STD KL	BA7100080		1
LAPP.1119407	1 meter	ÖLFLEX CLASSIC 110 7G2,5	1119407		2
LAPP.2170894	5,00 meter	ETHERLINE PN Cat.5 FD Profinet	2170894		3
MURR.7000-14541-7960500	1 pc	Ethernet M12, male, d-cod, open end, 5m	7000-14541-7960500		4
MURR.7000-14521-0000000	1 pc	Cut clamp Pin M12 4pin straight D-coded	7000-14521-0000000		5
PXC.2903370	1 pc	Relais 6A 250Vac, 1 PDT ,24Vdc	RIF-0-RPT-24DC/21		6
RIT.1612000	1 pc	Bus enclosure KX 600x300x155, without gland plate	KX.1612000		7
RIT.1570800	1 pc	Mounting plate KX 600x300 mm	KX.1570800		8

Summarized parts list

3CON Anlagenbau GmbH
Kleinfeld 16
A-6341 Ebbs

[3CON]_F02_002_V01

Article number	Quantity QU	Designation	Type number	Picture	Pos.
SIE.6ES7131-6BF01-0BA0	8 pc	ET 200SP DI 8x24VDC ST	6ES7131-6BF01-0BA0		9
SIE.6ES7193-6BP20-0DA0	3 pc	ET 200SP Baseunit Typ A0 BU15-P16+A10+2D	6ES7193-6BP20-0DA0		10
SIE.6ES7193-6BP20-0BA0	9 pc	ET 200SP Baseunit Typ A0 BU15-P16+A10+2B	6ES7193-6BP20-0BA0		11
SIE.6ES7134-6JD00-0CA1	1 pc	ET 200SP AI 4xRTD/TC 2-/4-WIRE HF	6ES7134-6JD00-0CA1		12
SIE.6ES7193-6BP00-0BA1	1 pc	ET 200SP Baseunit Typ A1 BU15-P16+A0+2B/T	6ES7193-6BP00-0BA1		13
SIE.6ES7132-6BF01-0BA0	1 pc	ET 200SP DQ 8x24VDC 0,5A ST	6ES7132-6BF01-0BA0		14
SIE.6ES7132-6BH01-0BA0	3 pc	ET 200SP DQ 16x24VDC 0,5A ST	6ES7132-6BH01-0BA0		15
SIE.6ES7155-6AA01-0BN0	1 pc	ET 200SP IM 155-6PN ST incl. BA 2xRJ45	6ES7155-6AA01-0BN0		16

Summarized parts list

3CON Anlagenbau GmbH
Kleinfeld 16
A-6341 Ebbs

[3CON]_F02_002_V01

Article number	Quantity QU	Designation	Type number	Picture	Pos.
WEI.TS 35X7.5	1 pc	Mounting rail 35x7,5	TS 35X7.5/LL 2M/ST/ZN		17
WEI.1608570000	15 pc	Feed-through serial terminal ZDU 2.5/4AN	ZDU 2.5/4AN		18
WEI.9540000000	6 pc	End stop ZEW 35	ZEW 35		19
WEI.1608800000	5 pc	End plate ZAP/TW 3	ZAP/TW 3		20
WEI.1608660000	2 pc	Modular PE terminal blocks ZPE 2.5/4AN	ZPE 2.5/4AN		21
WUT.50518	1 pc	Web- and Applikationsserver	pure.box 3		22

0	1	2	3	4	5	6	7	8	9

S2:Montageplatte

+.X01&EPC1/3

0	1	2	3	4	5	6	7	8	9

LT01.HS01

0	1	2	3	4	5	6	7	8	9

S2:Montageplatte

2

+UT01&EMA3/1

connector overview

3CON Anlagenbau GmbH
Kleinfeld 16
A-6341 Ebbs

Plug designation	Function text	Plug					Page of plug diagram
		first	last	Total PE	Total N	Total number	
=XS-XS1	Data	PE1	F2	2	0	36	
=XS-XS2	Heating system	PE1	F5	2	0	35	
=EC.01-XS1		L	N	0	0	2	
=EC.02-XS1		L	N	0	0	2	
=EC.03-XS1		L	N	0	0	2	
=EC.04-XS1		L	N	0	0	2	
=EC.05-XS1		L	N	0	0	2	
=EC.06-XS1		L	N	0	0	2	
=EC.07-XS1		L	N	0	0	2	
=EC.08-XS1		L	N	0	0	2	

Connector layout plan

3CON Anlagenbau GmbH
Kleinfeld 16
A-6341 Ebbs

[3CON]_F01_Stecker_V01

Reference indicator	ERP-number	Placement	Designation	Type number	Manufacturer	Ordernumber supplier
=XS-XS1	10011715		Hinged frame	09 14 024 0371	HARTING Technology Group	
	10010866		Pin module	09 14 002 3001	HARTING Technology Group	
	10010875	a	Pin module	09 15 004 3013	HARTING Technology Group	
	10010925	c;d	Pin module	09 14 008 2633	HARTING Technology Group	
	10010927	e	Pin module	09 14 012 2632	HARTING Technology Group	
	10011993	f	Pin module	09 14 002 2646	HARTING Technology Group	
	10008757		Docking frame	09 30 024 1701	HARTING Technology Group	

Connector layout plan

3CON Anlagenbau GmbH
Kleinfeld 16
A-6341 Ebbs

[3CON]_F01_Stecker_V01

Reference indicator	ERP-number	Placement	Designation	Type number	Manufacturer	Ordernumber supplier
=XS-XS2	10011715		Hinged frame	09 14 024 0371	HARTING Technology Group	
	10010925	a	Pin module	09 14 008 2633	HARTING Technology Group	
	10010868	b;c;d;e;f	Pin module	09 14 005 2616	HARTING Technology Group	
	10008757		Docking frame	09 30 024 1701	HARTING Technology Group	

Connector layout plan

3CON Anlagenbau GmbH
Kleinfeld 16
A-6341 Ebbs

[3CON]_F01_Stecker_V01

Reference indicator	ERP-number	Placement	Designation	Type number	Manufacturer	Ordernumber supplier
=EC.01-XS1	10011823	2	Connectors	91.921.3053.0	Wieland	
	10011824	2	Connectors	91.922.3053.0	Wieland	

Connector layout plan

3CON Anlagenbau GmbH
Kleinfeld 16
A-6341 Ebbs

[3CON]_F01_Stecker_V01

Reference indicator	ERP-number	Placement	Designation	Type number	Manufacturer	Ordernumber supplier
=EC.02-XS1	10011823	2	Connectors	91.921.3053.0	Wieland	
	10011824	2	Connectors	91.922.3053.0	Wieland	

Connector layout plan

3CON Anlagenbau GmbH
Kleinfeld 16
A-6341 Ebbs

[3CON]_F01_Stecker_V01

Reference indicator	ERP-number	Placement	Designation	Type number	Manufacturer	Ordernumber supplier
=EC.03-XS1	10011823	2	Connectors	91.921.3053.0	Wieland	
	10011824	2	Connectors	91.922.3053.0	Wieland	

Connector layout plan

3CON Anlagenbau GmbH

Kleinfeld 16

A-6341 Ebbs

[3CON]_F01_Stecker_V01

Reference indicator	ERP-number	Placement	Designation	Type number	Manufacturer	Ordernumber supplier
=EC.04-XS1	10011823	2	Connectors	91.921.3053.0	Wieland	
	10011824	2	Connectors	91.922.3053.0	Wieland	

Connector layout plan

3CON Anlagenbau GmbH
Kleinfeld 16
A-6341 Ebbs

[3CON]_F01_Stecker_V01

Reference indicator	ERP-number	Placement	Designation	Type number	Manufacturer	Ordernumber supplier
=EC.05-XS1	10011823	2	Connectors	91.921.3053.0	Wieland	
	10011824	2	Connectors	91.922.3053.0	Wieland	

Connector layout plan

3CON Anlagenbau GmbH
Kleinfeld 16
A-6341 Ebbs

[3CON]_F01_Stecker_V01

Reference indicator	ERP-number	Placement	Designation	Type number	Manufacturer	Ordernumber supplier
=EC.06-XS1	10011823	2	Connectors	91.921.3053.0	Wieland	
	10011824	2	Connectors	91.922.3053.0	Wieland	

Connector layout plan

3CON Anlagenbau GmbH

Kleinfeld 16

A-6341 Ebbs

[3CON]_F01_Stecker_V01

Reference indicator	ERP-number	Placement	Designation	Type number	Manufacturer	Ordernumber supplier
=EC.07-XS1	10011823	2	Connectors	91.921.3053.0	Wieland	
	10011824	2	Connectors	91.922.3053.0	Wieland	

Connector layout plan

3CON Anlagenbau GmbH
Kleinfeld 16
A-6341 Ebbs

[3CON]_F01_Stecker_V01

Reference indicator	ERP-number	Placement	Designation	Type number	Manufacturer	Ordernumber supplier
=EC.08-XS1	10011823	2	Connectors	91.921.3053.0	Wieland	
	10011824	2	Connectors	91.922.3053.0	Wieland	

Equipment list

3CON Anlagenbau GmbH
Kleinfeld 16
A-6341 Ebbs

[3CON_]F03_005_V01

[3CON_]F03_005_V01

device tag	Article designation	X-Ref
=EA+UT01 **-BTA1**	PT100 Contact resistance thermometer, moveable	=EA&EFS/1.0
=EA+UT01 **-BTA2**	PT100 Contact resistance thermometer, moveable	=EA&EFS/1.1
=EA+UT01 **-BTA3**	PT100 Contact resistance thermometer, moveable	=EA&EFS/1.2
=BA05+UT01 **-BGB1**	Measuring Amplifier Fiber optic, M8 4pin	=BA05&EFS/1.0
=BA05+UT01 **-BGB2**	Measuring Amplifier Fiber optic, M8 4pin	=BA05&EFS/1.1
=BA05+UT01 **-BGB3**	Measuring Amplifier Fiber optic, M8 4pin	=BA05&EFS/1.2
=BA05+UT01 **-BGB4**	Measuring Amplifier Fiber optic, M8 4pin	=BA05&EFS/1.3
=BA05+UT01 **-BGB5**	Measuring Amplifier Fiber optic, M8 4pin	=BA05&EFS/1.4
=MC01+UT01 **-BGB1**	Proximity sensor Cylinder, M8 3-pin, straight	=MC01&EFS/1.0
=MC01+UT01 **-BGB2**	Proximity sensor Cylinder, M8 3-pin, straight	=MC01&EFS/1.1
=MC01+UT01 **-BGB3**	Proximity sensor Cylinder, M8 3-pin, straight	=MC01&EFS/1.2
=MC01+UT01 **-BGB4**	Proximity sensor Cylinder, M8 3-pin, straight	=MC01&EFS/1.3
=MC01+UT01 **-BGB5**	Proximity sensor Cylinder, M8 3-pin, straight	=MC01&EFS/1.4
=MC01+UT01 **-BGB6**	Proximity sensor Cylinder, M8 3-pin, straight	=MC01&EFS/1.5
=MC01+UT01 **-BGB7**	Proximity sensor Cylinder, M8 3-pin, straight	=MC01&EFS/1.6
=MC01+UT01 **-BGB8**	Proximity sensor Cylinder, M8 3-pin, straight	=MC01&EFS/1.7
=MC01+UT01 **-BGB9**	Proximity sensor Cylinder, M8 3-pin, straight	=MC01&EFS/2.0
=MC01+UT01 **-BGB10**	Proximity sensor Cylinder, M8 3-pin, straight	=MC01&EFS/2.1
=MC01+UT01 **-KHB1**	Single valve SYx320	=MC01&EFS/3.0
=MC01+UT01 **-KHB2**	Single valve SYx320	=MC01&EFS/3.2
=MC01+UT01 **-KHB3**	Single valve SYx320	=MC01&EFS/3.4
=ML06+UT01 **-BGB1**	Proximity sensor [don't order] Cylinder T-slot, M8 3-pin	=ML06&EFS/1.0
=ML06+UT01 **-BGB2**	Proximity sensor [don't order] Cylinder T-slot, M8 3-pin	=ML06&EFS/1.1
=ML06+UT01 **-BGB3**	Proximity sensor [don't order] Cylinder T-slot, M8 3-pin	=ML06&EFS/1.2

device tag	Article designation	X-Ref
=ML06+UT01 **-BGB4**	Proximity sensor Cylinder, M8 3-pin, straight	=ML06&EFS/1.3
=ML06+UT01 **-BGB5**	Proximity sensor [don't order] Cylinder T-slot, M8 3-pin	=ML06&EFS/1.4
=ML06+UT01 **-KHB1**	Single valve SYx320	=ML06&EFS/2.0
=ML06+UT01 **-KHB2**	Single valve SYx320	=ML06&EFS/2.2
=EC.01+UT01 **-BT1**	temperature sensor PT100	=EC&EFS1/1.3
=EC.01+UT01 **-EB1**	Air heater LHS 21S System,230V/2.0kW	=EC&EFS1/1.0
=EC.02+UT01 **-BT1**	temperature sensor PT100	=EC&EFS1/1.7
=EC.02+UT01 **-EB1**	Air heater LHS 21S System,230V/2.0kW	=EC&EFS1/1.5
=EC.03+UT01 **-BT1**	temperature sensor PT100	=EC&EFS1/2.3
=EC.03+UT01 **-EB1**	Air heater LHS 21S System,230V/2.0kW	=EC&EFS1/2.0
=EC.04+UT01 **-BT1**	temperature sensor PT100	=EC&EFS1/2.7
=EC.04+UT01 **-EB1**	Air heater LHS 21S System,230V/2.0kW	=EC&EFS1/2.5
=EC.05+UT01 **-BT1**	temperature sensor PT100	=EC&EFS1/3.3
=EC.05+UT01 **-EB1**	Air heater LHS 21S System,230V/2.0kW	=EC&EFS1/3.0
=EC.06+UT01 **-BT1**	temperature sensor PT100	=EC&EFS1/3.7
=EC.06+UT01 **-EB1**	Air heater LHS 21S System,230V/2.0kW	=EC&EFS1/3.5
=EC.07+UT01 **-BT1**	temperature sensor PT100	=EC&EFS1/4.3
=EC.07+UT01 **-EB1**	Air heater LHS 21S System,230V/2.0kW	=EC&EFS1/4.0
=EC.08+UT01 **-BT1**	temperature sensor PT100	=EC&EFS1/4.7
=EC.08+UT01 **-EB1**	Air heater LHS 21S System,230V/2.0kW	=EC&EFS1/4.5

Summarized parts list

3CON Anlagenbau GmbH
Kleinfeld 16
A-6341 Ebbs

[3CON]_F02_002_V01

Article number	Quantity QU	Designation	Type number	Picture	Pos.
BAL.BCC0K8J	5 pc	M8 4pin straight Sensor-/Aktor-Leitungen, 5m	BCC M314-0000-10-003-PX0434-050-C003		1
BAL.BCC0KKP	25 pc	M8 3pin straight Sensor-/Aktor-Leitungen, 10m	BCC M313-0000-10-001-PX0334-100-C003		2
FES.579100	4 pc	Proximity sensor [don't order] Cylinder T-slot, M8 3-pin	SMT-8M-A-PS-24V-E-0.3-N-M8D		3
GRA.112985	8 pc	temperature sensor PT100	GF-7103.1.3-L.4.B.12.4000.A.350°C		4
HAGER.KN26N	1 pc	Quick-Connect terminal N-teminal 6x25mm², 20x4mm²	KN26N		5
HAGER.KN00A	1 pc	Quick-Connect terminal Adapter	KN00A		6
HAR.09 14 024 0371	2 pc	Hinged frame Size: 24 B, 6 Module a-f	09 14 024 0371		7
HAR.09 14 002 3001	1 pc	Pin module modular Quintax	09 14 002 3001		8

Summarized parts list

3CON Anlagenbau GmbH
Kleinfeld 16
A-6341 Ebbs

[3CON]_F02_002_V01

Article number	Quantity QU	Designation	Type number	Picture	Pos.
HAR.09 15 004 3013	1 pc	Pin module modular Quintax, 4pin, 10A, shielded, without crimp contacts	09 15 004 3013		9
HAR.09 14 008 2633	3 pc	Pin module modular, 8pin, 16A, Quick-Lock connection	09 14 008 2633		10
HAR.09 14 012 2632	1 pc	Pin module modular, 12pin, 10A, Quick-Lock connection	09 14 012 2632		11
HAR.09 14 002 2646	1 pc	Pin module modular, 2pin 70A, 6-16mm², axial screw connection	09 14 002 2646		12
HAR.09 30 024 1701	2 pc	Docking frame Size: 24 B	09 30 024 1701		13
HAR.09 14 005 2616	5 pc	Pin module modular, 5pin, 16A, cage clamp connection	09 14 005 2616		14
JUM.TN 00635743	3 pc	PT100 Contact resistance thermometer, moveable	902550/99-378-1003-1-11-5000/315		15
KEY.FS-N11CP	5 pc	Measuring Amplifier Fiber optic, M8 4pin	FS-N11CP		16

Summarized parts list

3CON Anlagenbau GmbH
Kleinfeld 16
A-6341 Ebbs

[3CON]_F02_002_V01

Article number	Quantity QU	Designation	Type number	Picture	Pos.
KEY.FU-6F	5 pc	Fiber optic sensor	FU-6F		17
LAPP.2170894	1 meter	ETHERLINE PN Cat.5 FD Profinet	2170894		18
LAPP.0026170	8 meter	ÖLFLEX FD CLASSIC 810 3G2,5	0026170		19
LAPP.0026104	8 meter	ÖLFLEX FD CLASSIC 810 7G0,5	0026104		20
LAPP.0027530	8 meter	ÖLFLEX FD 855 P 2X0,5	0027530		21
LEI.139.910	8 pc	Air heater LHS 21S System,230V/2.0kW	139 910		22
SMC.D-M9PSAPC-595	11 pc	Proximity sensor Cylinder, M8 3-pin, straight	D-M9PSAPC-595		23
SMC.SV_SYx320	5 pc	Single valve SYx320			24

Summarized parts list

3CON Anlagenbau GmbH
Kleinfeld 16
A-6341 Ebbs

[3CON]_F02_002_V01

Article number	Quantity QU	Designation	Type number	Picture	Pos.
WIE.GST15I2S B1 ZR1W WS	8 pc	Connectors Female connector with strain relief 2-pole	91.921.3053.0		25
WIE.GST15I2S S1 ZR1W WS	8 pc	Connectors Male connector with strain relief 2-pole	91.922.3053.0		26

0	1	2	3	4	5	6	7	8	9

S1:Montageplatte

+UT01&EPC1/4

			Job name DAG_BR 449_IP_VAC+EDGE+ITG+WELD+PUNCH		Job number 1011002189	IEC	3CON Anlagenbau GmbH	S1:Montageplatte		==1005803	=REPORT	&ELU
			BR 449_IP lower center cover+glove box_LHD_EDGE_TOOL_1+0_1+0								Project-related evaluations	In/on-equipment location
					Drawing number 1005803	Version					+UT01.X01	Page 1
Modification	Date	Name	Creator AK Andreas Krischker	Approved by				last Editor AK Andreas Krischker	Date 02.09.2024		Upper tool 1	Sheet 102 from 122

0	1	2	3	4	5	6	7	8	9

UT01.X01

0	1	2	3	4	5	6	7	8	9

S1:Montageplatte

0	1	2	3	4	5	6	7	8	9

S1:Montageplatte

0	1	2	3	4	5	6	7	8	9

UT01.X01

0	1	2	3	4	5	6	7	8	9

S1:Montageplatte

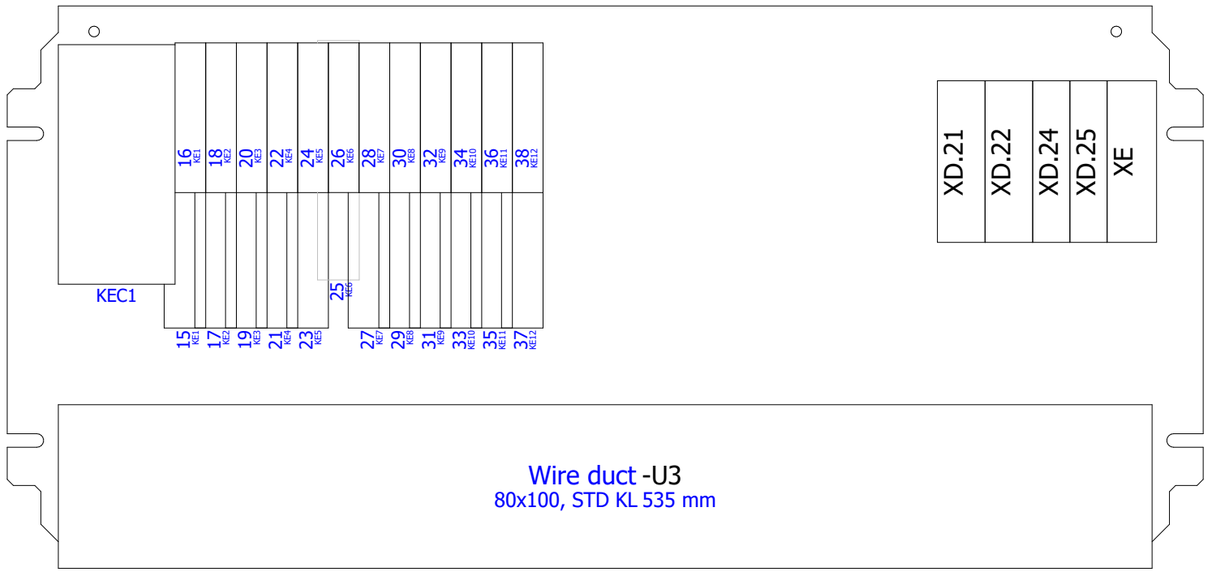

S2:Montageplatte

6 8

			Job name DAG_BR 449_IP_VAC+EDGE+ITG+WELD+PUNCH		Job number 1011002189	IEC	3CON Anlagenbau GmbH	S2:Montageplatte	==1005803	=REPORT	&ELU
			BR 449_IP lower center cover+glove box_LHD_EDGE_TOOL_1+0_1+0							Project-related evaluations	In/on-equipment location
					Drawing number 1005803	Version				+UT01.X01	Page 7
Modification	Date	Name	Creator AK Andreas Krischker	Approved by				last Editor C.DEMIR Date 16.01.2025		Upper tool 1	Sheet 108 from 122

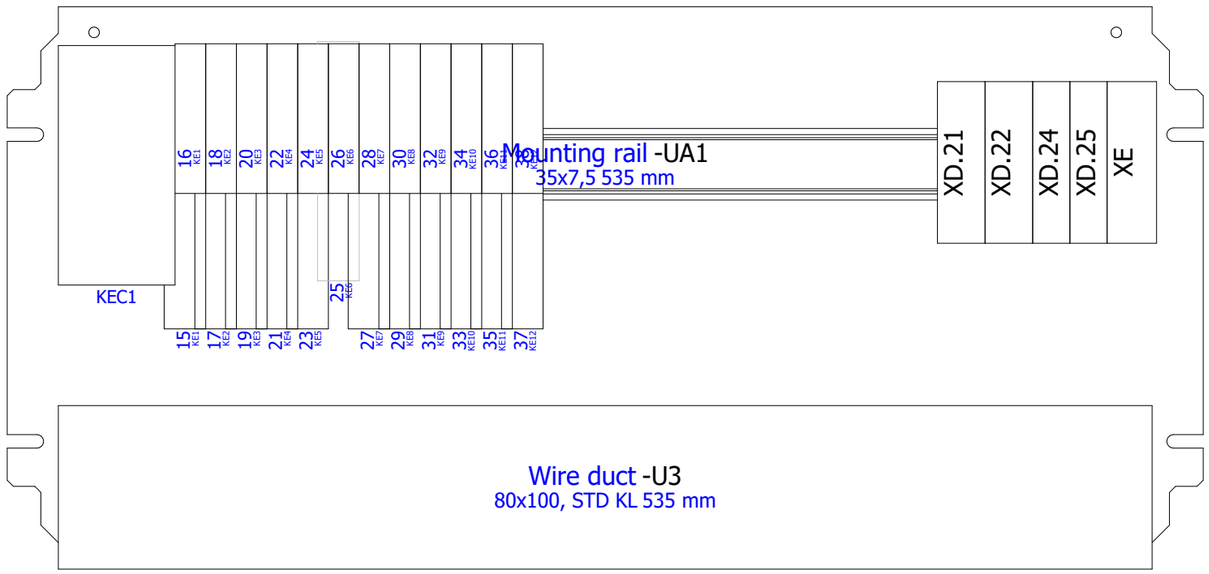

Enclosure legend

Item number	BMK	Type number	Designation	Length
11	-U2	KX.1570800	Mounting plate KX 600x300 mm	
12	-U3	BA7100080	Wire duct 80x100, STD KL	535 mm
13	-UA1	TS 35X7.5/LL 2M/ST/ZN	Mounting rail 35x7,5	535 mm
14	=PLC-KEC1	6ES7155-6AA01-0BN0	ET 200SP IM 155-6PN ST incl. BA 2xRJ45	
15	=PLC-KE1	6ES7193-6BP20-0DA0	ET 200SP Baseunit Typ A0 BU15-P16+A10+2D	
16	=PLC-KE1	6ES7131-6BF01-0BA0	ET 200SP DI 8x24VDC ST	
17	=PLC-KE2	6ES7193-6BP20-0BA0	ET 200SP Baseunit Typ A0 BU15-P16+A10+2B	
18	=PLC-KE2	6ES7131-6BF01-0BA0	ET 200SP DI 8x24VDC ST	
19	=PLC-KE3	6ES7193-6BP20-0BA0	ET 200SP Baseunit Typ A0 BU15-P16+A10+2B	
20	=PLC-KE3	6ES7131-6BF01-0BA0	ET 200SP DI 8x24VDC ST	
21	=PLC-KE4	6ES7193-6BP20-0BA0	ET 200SP Baseunit Typ A0 BU15-P16+A10+2B	
22	=PLC-KE4	6ES7131-6BF01-0BA0	ET 200SP DI 8x24VDC ST	
23	=PLC-KE5	6ES7193-6BP20-0BA0	ET 200SP Baseunit Typ A0 BU15-P16+A10+2B	
24	=PLC-KE5	6ES7131-6BF01-0BA0	ET 200SP DI 8x24VDC ST	
25	=PLC-KE6	6ES7193-6BP00-0BA1	ET 200SP Baseunit Typ A1 BU15-P16+A0+2B/T	
26	=PLC-KE6	6ES7134-6JD00-0CA1	ET 200SP AI 4xRTD/TC 2-/4-WIRE HF	
27	=PLC-KE7	6ES7193-6BP20-0BA0	ET 200SP Baseunit Typ A0 BU15-P16+A10+2B	
28	=PLC-KE7	6ES7134-6JD00-0CA1	ET 200SP AI 4xRTD/TC 2-/4-WIRE HF	
29	=PLC-KE8	6ES7193-6BP20-0BA0	ET 200SP Baseunit Typ A0 BU15-P16+A10+2B	
30	=PLC-KE8	6ES7134-6JD00-0CA1	ET 200SP AI 4xRTD/TC 2-/4-WIRE HF	
31	=PLC-KE9	6ES7193-6BP20-0BA0	ET 200SP Baseunit Typ A0 BU15-P16+A10+2B	
32	=PLC-KE9	6ES7135-6HD00-0BA1	ET 200SP AQ 4xU/I ST	
33	=PLC-KE10	6ES7193-6BP20-0BA0	ET 200SP Baseunit Typ A0 BU15-P16+A10+2B	
34	=PLC-KE10	6ES7135-6HD00-0BA1	ET 200SP AQ 4xU/I ST	
35	=PLC-KE11	6ES7193-6BP20-0DA0	ET 200SP Baseunit Typ A0 BU15-P16+A10+2D	
36	=PLC-KE11	6ES7132-6BF01-0BA0	ET 200SP DQ 8x24VDC 0,5A ST	
37	=PLC-KE12	6ES7193-6BP20-0DA0	ET 200SP Baseunit Typ A0 BU15-P16+A10+2D	

S2:Montageplatte

7

&EMA1/1

			Job name DAG_BR 449_IP_VAC+EDGE+ITG+WELD+PUNCH	Job number 1011002189	IEC	3CON Anlagenbau GmbH	S2:Montageplatte		==1005803	=REPORT	&ELU
			BR 449_IP lower center cover+glove box_LHD_EDGE_TOOL_1+0_1+0	Drawing number 1005803	Version					Project-related evaluations	In/on-equipment location
										+UT01.X01	Page 8
Modification	Date	Name	Creator AK Andreas Krischker	Approved by			last Editor C.DEMIR	Date 16.01.2025		Upper tool 1	Sheet 109 from 122

Terminal-strip overview

3CON Anlagenbau GmbH
Kleinfeld 16
A-6341 Ebbs

[3CON]_F14_002_V01

Terminal strip	Function text	Terminals					Page of the terminal diagram
		first	last	Total PE	Total N	Total number	
-XD.21		1	3	0	0	3	==1005803=REPORT+UT01.X01&EMA2/1
-XD.22		1	3	0	0	3	==1005803=REPORT+UT01.X01&EMA2/2
-XD.24		1	2	0	0	2	==1005803=REPORT+UT01.X01&EMA2/3
-XD.25		1	2	0	0	2	==1005803=REPORT+UT01.X01&EMA2/4
-XE		1	2	2	0	2	==1005803=REPORT+UT01.X01&EMA2/5

Terminal diagram

3CON Anlagenbau GmbH
Kleinfeld 16
A-6341 Ebbs

[3CON]_F13_001_V01

Terminal diagram
==1005803+UT01.X01-XD.21

Function:
Installation location: Terminal box upper tool 1

1	=GD24-WDB1 CLASSIC 110 7x2,5 mm²
2	
3	
4	
5	
6	
7	
8	
9	
10	

Function text	1	2	3	4	5	6	7	8	9	10
GND										
GND										
GND										

Target designation	Connection	Terminal connection	Terminal	Terminal connection	Saddle jumper	Wire bridges	PLC connection point	Target designation	Connection	10	9	8	7	6	5	4	3	2	1	Page / column
ZDU 2.5/4AN																				
=PLC-KEC1	-X80:2	b	**1**	a				=XS+UT01-XS1	C1										1	=GD24&EFS/1.1
=PLC-KE1	9A	c																		
=PLC-KE11	9A	d																		
		b	**2**	a				=PLC-KE12	9A											=GD24&EFS/1.1
		c																		
		d																		
		b	**3**	a																=GD24&EFS/1.2
		c																		
		d																		

			Job name DAG_BR 449_IP_VAC+EDGE+ITG+WELD+PUNCH	Job number 1011002189	IEC	3CON Anlagenbau GmbH	Klemmenplan ==1005803+UT01.X01-XD.21	==1005803	=REPORT	&EMA2
			BR 449_IP lower center cover+glove box_LHD_EDGE_TOOL_1+0_1+0	Drawing number 1005803	Version				Project-related evaluations	Terminal diagram
									+UT01.X01	Page 1
Modification	Date	Name	Creator AK Andreas Krischker	Approved by			last Editor AK Andreas Krischker	Date 03.09.2024	Upper tool 1	Sheet 111 from 122

Terminal diagram

3CON Anlagenbau GmbH
Kleinfeld 16
A-6341 Ebbs

[3CON]_F13_001_V01

1	=EC.02+UT01-WD2	FD CLASSIC 810 7x0,5 mm²
2	=EC.03+UT01-WD2	FD CLASSIC 810 7x0,5 mm²
3	=EC.04+UT01-WD2	FD CLASSIC 810 7x0,5 mm²
4	=EC.06+UT01-WD2	FD CLASSIC 810 7x0,5 mm²
5	=EC.07+UT01-WD2	FD CLASSIC 810 7x0,5 mm²
6	=EC.08+UT01-WD2	FD CLASSIC 810 7x0,5 mm²
7		
8		
9		
10		

Terminal diagram
==1005803+UT01.X01-XD.22

Function:

Installation location: Terminal box upper tool 1

1	=GD24-WDB1	CLASSIC 110 7x2,5 mm²
2	=EC.01+UT01-WD2	FD CLASSIC 810 7x0,5 mm²
3	=EC.05+UT01-WD2	FD CLASSIC 810 7x0,5 mm²
4		
5		
6		
7		
8		
9		
10		

Function text	1	2	3	4	5	6	7	8	9	10	Target designation	Connection	Terminal connection	Terminal	Terminal connection	Saddle jumper	Wire bridges	PLC connection point	Target designation	Connection	10	9	8	7	6	5	4	3	2	1	Page / column
											ZDU 2.5/4AN																				
24Vdc Control voltage											=PLC-KEC1	-X80:1	b	**1**	a				=XS+UT01-XS1	C2										2	=GD24&EFS/1.1
											=PLC-KE1	L	c																		
													d																		
24Vdc Control voltage	6										=EC.02+UT01-EB1	Interface:5	b	**2**	a				=EC.01+UT01-EB1	Interface:5									6		=GD24&EFS/1.1
		6									=EC.03+UT01-EB1	Interface:5	c																		
			6								=EC.04+UT01-EB1	Interface:5	d																		
24Vdc Control voltage				6							=EC.06+UT01-EB1	Interface:5	b	**3**	a				=EC.05+UT01-EB1	Interface:5								6			=GD24&EFS/1.2
					6						=EC.07+UT01-EB1	Interface:5	c																		
						6					=EC.08+UT01-EB1	Interface:5	d																		

1 3

			Job name DAG_BR 449_IP_VAC+EDGE+ITG+WELD+PUNCH	Job number 1011002189	IEC	3CON Anlagenbau GmbH	Klemmenplan ==1005803+UT01.X01-XD.22	==1005803	=REPORT	&EMA2
			BR 449_IP lower center cover+glove box_LHD_EDGE_TOOL_1+0_1+0						Project-related evaluations	Terminal diagram
				Drawing number 1005803	Version				+UT01.X01	Page 2
Modification	Date	Name	Creator AK Andreas Krischker				last Editor AK Andreas Krischker	Date 03.09.2024	Upper tool 1	Sheet 112 from 122

Terminal diagram

3CON Anlagenbau GmbH
Kleinfeld 16
A-6341 Ebbs

[3CON]_F13_001_V01

Terminal diagram
==1005803+UT01.X01-XD.24

Function:
Installation location: Terminal box upper tool 1

1	
2	
3	
4	
5	
6	
7	
8	
9	
10	

Function text	1	2	3	4	5	6	7	8	9	10
Emergency stop general										
Emergency stop general										

Target designation	Connection	Terminal connection	Terminal	Terminal connection	Saddle jumper	Wire bridges	PLC connection point	Target designation	Connection
ZDU 2.5/4AN									
=PLC-KE11	L	b	**1**	a				=XS+UT01-XS1	C3
		c							
		d							
		b	**2**	a					
		c							
		d							

1	=GD24-WDB1									CLASSIC 110 7x2,5 mm²
2										
3										
4										
5										
6										
7										
8										
9										
10										
10	9	8	7	6	5	4	3	2	1	Page / column
									3	=GD24&EFS/1.4
										=GD24&EFS/1.4

			Job name DAG_BR 449_IP_VAC+EDGE+ITG+WELD+PUNCH		Job number 1011002189	IEC	3CON Anlagenbau GmbH	Klemmenplan ==1005803+UT01.X01-XD.24	==1005803	=REPORT	&EMA2
			BR 449_IP lower center cover+glove box_LHD_EDGE_TOOL_1+0_1+0							Project-related evaluations	Terminal diagram
					Drawing number 1005803	Version				+UT01.X01	Page 3
Modification	Date	Name	Creator AK Andreas Krischker	Approved by				last Editor AK Andreas Krischker	Date 03.09.2024	Upper tool 1	Sheet 113 from 122

Terminal diagram

3CON Anlagenbau GmbH
Kleinfeld 16
A-6341 Ebbs

[3CON]_F13_001_V01

Terminal diagram
==1005803+UT01.X01-XD.25

Function:
Installation location: Terminal box upper tool 1

1	
2	
3	
4	
5	
6	
7	
8	
9	
10	

Function text	1	2	3	4	5	6	7	8	9	10
Emergency stop insert area										
Emergency stop insert area										

Target designation	Connection	Terminal connection	Terminal	Terminal connection	Saddle jumper	Wire bridges	PLC connection point	Target designation	Connection
ZDU 2.5/4AN									
=PLC-KE12	L	b	**1**	a				=XS+UT01-XS1	C4
		c							
		d							
		b	**2**	a					
		c							
		d							

1	=GD24-WDB1									CLASSIC 110 7x2,5 mm²
2										
3										
4										
5										
6										
7										
8										
9										
10										
10	9	8	7	6	5	4	3	2	1	Page / column
									4	=GD24&EFS/1.5
										=GD24&EFS/1.6

			Job name DAG_BR 449_IP_VAC+EDGE+ITG+WELD+PUNCH		Job number 1011002189	IEC	3CON Anlagenbau GmbH	Klemmenplan ==1005803+UT01.X01-XD.25	==1005803	=REPORT	&EMA2
			BR 449_IP lower center cover+glove box_LHD_EDGE_TOOL_1+0_1+0							Project-related evaluations	Terminal diagram
					Drawing number 1005803	Version				+UT01.X01	Page 4
Modification	Date	Name	Creator AK Andreas Krischker	Approved by				last Editor AK Andreas Krischker	Date 03.09.2024	Upper tool 1	Sheet 114 from 122

Terminal diagram

3CON Anlagenbau GmbH
Kleinfeld 16
A-6341 Ebbs

[3CON]_F13_001_V01

Terminal diagram
==1005803+UT01.X01-XE

Function:
Installation location: Terminal box upper tool 1

	Function text	1	2	3	4	5	6	7	8	9	10
1											
2											
3											
4											
5											
6											
7											
8											
9											
10											

Target designation	Connection	Terminal connection	Terminal	Terminal connection	Saddle jumper	Wire bridges	PLC connection point	Target designation	Connection
ZPE 2.5/4AN									
		b	1 ⏚	a				=XS+UT01-XS1	PE1
		c							
		d							
		b	2 ⏚	a					
		c							
		d							

	1	2	3	4	5	6	7	8	9	10	Page / column
1	=GD24-WDB1										CLASSIC 110 7x2,5 mm²
2											
3											
4											
5											
6											
7											
8											
9											
10											
										GNYE	=GD24&EFS/1.4
											=GD24&EFS/1.4

			Job name DAG_BR 449_IP_VAC+EDGE+ITG+WELD+PUNCH		Job number 1011002189	IEC	3CON Anlagenbau GmbH	Klemmenplan ==1005803+UT01.X01-XE	==1005803	=REPORT	&EMA2
			BR 449_IP lower center cover+glove box_LHD_EDGE_TOOL_1+0_1+0							Project-related evaluations	Terminal diagram
					Drawing number 1005803	Version				+UT01.X01	Page 5
Modification	Date	Name	Creator AK Andreas Krischker	Approved by				last Editor AK Andreas Krischker	Date 03.09.2024	Upper tool 1	Sheet 115 from 122

Equipment list

3CON Anlagenbau GmbH
Kleinfeld 16
A-6341 Ebbs

[3CON_]F03_005_V01

[3CON_]F03_005_V01

device tag	Article designation	X-Ref
+UT01.X01 **-U1**	Bus enclosure KX 600x300x155, without gland plate	(==1005803+UT01.X01.S1)
+UT01.X01 **-U2**	Mounting plate KX 600x300 mm	(==1005803+UT01.X01.S1)
+UT01.X01 **-U3**	Wire duct 80x100, STD KL	(==1005803+UT01.X01.S1)
+UT01.X01 **-UA1**	Mounting rail 35x7,5	(==1005803+UT01.X01.S1)
=PLC+UT01.X01 **-KE1**	ET 200SP DI 8x24VDC ST	=PLC&EFS/1.2
=PLC+UT01.X01 **-KE2**	ET 200SP DI 8x24VDC ST	=PLC&EFS/1.2
=PLC+UT01.X01 **-KE3**	ET 200SP DI 8x24VDC ST	=PLC&EFS/1.3
=PLC+UT01.X01 **-KE4**	ET 200SP DI 8x24VDC ST	=PLC&EFS/1.4
=PLC+UT01.X01 **-KE5**	ET 200SP DI 8x24VDC ST	=PLC&EFS/1.4
=PLC+UT01.X01 **-KE6**	ET 200SP AI 4xRTD/TC 2-/4-WIRE HF	=PLC&EFS/2.1
=PLC+UT01.X01 **-KE7**	ET 200SP AI 4xRTD/TC 2-/4-WIRE HF	=PLC&EFS/2.2
=PLC+UT01.X01 **-KE8**	ET 200SP AI 4xRTD/TC 2-/4-WIRE HF	=PLC&EFS/2.2
=PLC+UT01.X01 **-KE9**	ET 200SP AQ 4xU/I ST	=PLC&EFS/2.3
=PLC+UT01.X01 **-KE10**	ET 200SP AQ 4xU/I ST	=PLC&EFS/2.4
=PLC+UT01.X01 **-KE11**	ET 200SP DQ 8x24VDC 0,5A ST	=PLC&EFS/2.4
=PLC+UT01.X01 **-KE12**	ET 200SP DQ 8x24VDC 0,5A ST	=PLC&EFS/2.5
=PLC+UT01.X01 **-KEC1**	ET 200SP IM 155-6PN ST incl. BA 2xRJ45	=+&EFA/2.4

device tag	Article designation	X-Ref

Summarized parts list

3CON Anlagenbau GmbH
Kleinfeld 16
A-6341 Ebbs

[3CON]_F02_002_V01

Article number	Quantity QU	Designation	Type number	Picture	Pos.
HAGER.BA7100080	1 pc	Wire duct 80x100, STD KL	BA7100080		1
LAPP.1119407	1 meter	ÖLFLEX CLASSIC 110 7G2,5	1119407		2
RIT.1612000	1 pc	Bus enclosure KX 600x300x155, without gland plate	KX.1612000		3
RIT.1570800	1 pc	Mounting plate KX 600x300 mm	KX.1570800		4
SIE.6ES7131-6BF01-0BA0	5 pc	ET 200SP DI 8x24VDC ST	6ES7131-6BF01-0BA0		5
SIE.6ES7193-6BP20-0DA0	3 pc	ET 200SP Baseunit Typ A0 BU15-P16+A10+2D	6ES7193-6BP20-0DA0		6
SIE.6ES7193-6BP20-0BA0	8 pc	ET 200SP Baseunit Typ A0 BU15-P16+A10+2B	6ES7193-6BP20-0BA0		7
SIE.6ES7134-6JD00-0CA1	3 pc	ET 200SP AI 4xRTD/TC 2-/4-WIRE HF	6ES7134-6JD00-0CA1		8

Summarized parts list

3CON Anlagenbau GmbH
Kleinfeld 16
A-6341 Ebbs

[3CON]_F02_002_V01

Article number	Quantity QU	Designation	Type number	Picture	Pos.
SIE.6ES7193-6BP00-0BA1	1 pc	ET 200SP Baseunit Typ A1 BU15-P16+A0+2B/T	6ES7193-6BP00-0BA1		9
SIE.6ES7135-6HD00-0BA1	2 pc	ET 200SP AQ 4xU/I ST	6ES7135-6HD00-0BA1		10
SIE.6ES7132-6BF01-0BA0	2 pc	ET 200SP DQ 8x24VDC 0,5A ST	6ES7132-6BF01-0BA0		11
SIE.6ES7155-6AA01-0BN0	1 pc	ET 200SP IM 155-6PN ST incl. BA 2xRJ45	6ES7155-6AA01-0BN0		12
WEI.TS 35X7.5	1 pc	Mounting rail 35x7,5	TS 35X7.5/LL 2M/ST/ZN		13
WEI.1608570000	10 pc	Feed-through serial terminal ZDU 2.5/4AN	ZDU 2.5/4AN		14
WEI.9540000000	6 pc	End stop ZEW 35	ZEW 35		15
WEI.1608800000	5 pc	End plate ZAP/TW 3	ZAP/TW 3		16

Summarized parts list

3CON Anlagenbau GmbH
Kleinfeld 16
A-6341 Ebbs

[3CON]_F02_002_V01

Article number	Quantity QU	Designation	Type number	Picture	Pos.
WEI.1608660000	2 pc	Modular PE terminal blocks ZPE 2.5/4AN	ZPE 2.5/4AN		17

0	1	2	3	4	5	6	7	8	9

S1:Montageplatte

+UT01.X01&EPC1/3

			Job name DAG_BR 449_IP_VAC+EDGE+ITG+WELD+PUNCH		Job number 1011002189	IEC	3CON Anlagenbau GmbH	S1:Montageplatte		==1005803	=REPORT	&ELU
			BR 449_IP lower center cover+glove box_LHD_EDGE_TOOL_1+0_1+0								Project-related evaluations	In/on-equipment location
					Drawing number 1005803	Version					+LT01.HS01.X01	Page 1
Modification	Date	Name	Creator	AK Andreas Krischker	Approved by			last Editor AK Andreas Krischker	Date 02.09.2024		lower tool 1	Sheet 120 from 122

0	1	2	3	4	5	6	7	8	9

LT01.HS01.X01

0	1	2	3	4	5	6	7	8	9

S1:Montageplatte

2